SITE DEVELOPMENT PLANS FOR
QUIKTRIP STORE #0033
2400 E. KENOSHA ST.
BROKEN ARROW, OK

GENERAL NOTES:

A. IN ACCORDANCE WITH GENERALLY ACCEPTED CONSTRUCTION PRACTICES, THE CONTRACTOR SHALL BE SOLELY AND COMPLETELY RESPONSIBLE FOR CONDITIONS OF THE JOB SITE, INCLUDING SAFETY OF ALL PERSONS AND PROPERTY DURING PERFORMANCE OF THE WORK. THIS REQUIREMENT WILL APPLY CONTINUOUSLY AND NOT BE LIMITED TO NORMAL WORKING HOURS. ANY CONSTRUCTION OBSERVATION BY THE ENGINEER OF THE CONTRACTOR'S PERFORMANCE IS NOT INTENDED TO INCLUDE REVIEW OF THE ADEQUACY OF THE CONTRACTOR'S SAFETY MEASURES, IN, ON OR NEAR THE CONSTRUCTION SITE.

B. CONTRACTOR SHALL BE RESPONSIBLE FOR RAZING AND REMOVAL OF THE EXISTING STRUCTURES, RELATED UTILITIES, PAVING, AND ANY OTHER EXISTING IMPROVEMENTS AS NOTED. REF. SITE WORK SPECIFICATIONS.

C. CONTRACTOR IS TO REMOVE AND DISPOSE OF ALL DEBRIS, RUBBISH AND OTHER MATERIALS RESULTING FROM PREVIOUS AND CURRENT DEMOLITION OPERATIONS. DISPOSAL WILL BE IN ACCORDANCE WITH ALL LOCAL, STATE AND/OR FEDERAL REGULATIONS GOVERNING SUCH OPERATIONS.

D. THE GENERAL CONTRACTOR WILL BE HELD SOLELY RESPONSIBLE FOR AND SHALL TAKE ALL PRECAUTIONS NECESSARY TO AVOID PROPERTY DAMAGE TO ADJACENT PROPERTIES DURING THE CONSTRUCTION PHASES OF THIS PROJECT.

E. ALL CONSTRUCTION IN STATE HIGHWAY DEPARTMENT RIGHT-OF-WAY SHALL BE COORDINATED WITH THE HIGHWAY DEPARTMENT RESIDENT MAINTENANCE ENGINEER. SPECIFICATIONS ADOPTED BY USA DEPARTMENT OF TRANSPORTATION, MARCH 1, 1993, AND SPECIFICATION ITEMS LISTED AND DATED AS FOLLOWS SHALL GOVERN ON THIS PROJECT.

F. ALL SITE WORK FOR THIS PROJECT SHALL MEET OR EXCEED THE SPECIFICATIONS OF THE RELEVANT UTILITY COMPANY OR REGULATORY AUTHORITY, AND THE SPECIFICATIONS FOR THE CONSTRUCTION OF THE EXISTING IMPROVEMENTS WHICH ARE BEING ALTERED OR REPLACED. CONTRACTOR SHALL CONTACT THE ENGINEER FOR SPECIFICATION SECTIONS FOR ITEMS SUCH AS LANDSCAPING AND IRRIGATION THAT ARE AFFECTED BY THE WORK BUT NOT COMPLETELY DETAILED OR SPECIFIED ON THESE PLANS.

G. CONSTRUCTION TO BE IN COMPLIANCE WITH THE CITY OF BROKEN ARROW STANDARD CONSTRUCTION SPECIFICATIONS.

WETLANDS NOTICE:

ANY DEVELOPMENT, EXCAVATION, CONSTRUCTION, OR FILLING IN A U.S. CORPS OF ENGINEERS DESIGNATED WETLAND IS SUBJECT TO LOCAL, STATE AND FEDERAL APPROVALS. THE CONTRACTOR SHALL COMPLY WITH ALL PERMIT REQUIREMENTS AND/OR RESTRICTIONS AND ANY VIOLATION WILL BE SUBJECT TO FEDERAL PENALTY. THE CONTRACTOR SHALL HOLD THE OWNER/ DEVELOPER, THE ENGINEER AND THE LOCAL GOVERNING AGENCIES HARMLESS AGAINST SUCH VIOLATION.

WARRANTY/DISCLAIMER:

THE DESIGNS REPRESENTED IN THESE PLANS ARE IN ACCORDANCE WITH ESTABLISHED PRACTICES OF CIVIL ENGINEERING FOR THE DESIGN FUNCTIONS AND USES INTENDED BY THE OWNER AT THIS TIME. HOWEVER, NEITHER THE ENGINEER NOR ITS PERSONNEL CAN OR DO WARRANT THESE DESIGNS OR PLANS AS CONSTRUCTED EXCEPT IN THE SPECIFIC CASES WHERE THE ENGINEER INSPECTS AND CONTROLS THE PHYSICAL CONSTRUCTION ON A CONTEMPORARY BASIS AT THE SITE.

NOTICE TO BIDDERS:

ALL QUESTIONS REGARDING THE PREPARATION OF THE GENERAL CONTRACTOR'S BID SHALL BE DIRECTED TO THE OWNER'S CONSTRUCTION REPRESENTATIVE. SUBCONTRACTORS MUST DIRECT THEIR QUESTIONS THROUGH THE GENERAL CONTRACTOR. THE CONSULTING ARCHITECT AND/OR THE CONSULTING ENGINEER SHALL NOT BE CONTACTED DIRECTLY WITHOUT PRIOR AUTHORIZATION FROM THE OWNER/DEVELOPER.

FLOOD CERTIFICATION:

THIS PROPERTY LIES IN UNSHADED ZONE "X" AND DOES NOT LOCATE WITHIN ANY PRESENTLY ESTABLISHED 100-YEAR FLOOD PLAIN, AS SHOWN BY THE FEDERAL EMERGENCY MANAGEMENT AGENCY, FLOOD INSURANCE RATE MAP FOR THE CITY OF BROKEN ARROW, WAGONER COUNTY, OKLAHOMA, COMMUNITY PANEL NUMBER 40145C0095J EFFECTIVE DATE SEPTEMBER 30, 2016.

BENCHMARKS:

BM-1 ADS CONTROL "BA 33" - 5/8" REBAR - 1 1/2" ALUMINUM CAP

ELEVATION=732.73'

IMPERVIOUS CALCULATIONS:

TOTAL SITE AREA:	79,070 S.F.
EXISTING IMPERVIOUS AREA:	66,376 S.F.
PROPOSED IMPERVIOUS AREA:	71,991 S.F.
TOTAL IMPERVIOUS INCREASE:	5,615 S.F.

Vicinity Map
Not to Scale

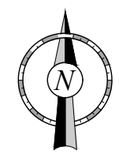

MUNICIPAL CONTACT LIST:

CITY OF BROKEN ARROW

INCOG
2 WEST 2ND STREET #800
TULSA, OK 74103
TEL: (918) 579-9470
FAX: (918) 583-1024
CONTACT: SUSAN MILLER

CITY OF BROKEN ARROW
ENGINEERING DEPARTMENT
485 NORTH POPLAR AVENUE
BROKEN ARROW, OK, 74013
TEL: (918) 259-7000
EXT. 5414
CONTACT: ALEX MILLS, P.E., CFM

CITY FIRE DEPARTMENT
1101 N. 6TH STREET
BROKEN ARROW, OK 74012
TEL: (918) 259-2400 EXT. 6355
CONTACT: JEREMY MOORE

DEVELOPMENT SERVICES DEPARTMENT
220 S. 1ST STREET
BROKEN ARROW, OK 74012
TEL: (918) 259-2400
EXT. 5426
CONTACT: MICHAEL SKATES

TRANSPORTATION DEPARTMENT
1500 E. JOLIET
BROKEN ARROW, OK 74012
TEL: (918) 259-4550
FAX: (918) 251-8799
CONTACT: JAMES MCNABB

CITY WATER UTILITIES
220 S. 1ST STREET
BROKEN ARROW, OK 74012
TEL: (918) 259-7000 EXT. 7375
CONTACT: ANTHONY DANIEL

AEP/PSO
212 E. 6TH STREET
TULSA, OK 74102
TEL: (918) 250-6211

ONG
5848 E. 15TH STREET
TULSA, OK 74112-6402
TEL: (918) 831-8259

AT&T
5303 E. 71ST STREET
TULSA, OK 74136
TEL: (918) 596-6422

COX COMMUNICATIONS INC.
11811 E. 51ST STREET
TULSA, OK 74145
TEL: (918) 286-4716

PROJECT CONTACT LIST:

SURVEYOR OF RECORD
SISEMORE WEISZ & ASSOCIATES, INC.
DEAN ROBINSON, P.L.S.
6111 EAST 32ND PLACE
TULSA, OKLAHOMA 74135
TEL: (918) 665-3600
FAX: (918) 665-8668

ENGINEER OF RECORD
AAB ENGINEERING, LLC
ALAN BETCHAN, P.E. CFM
PO BOX 2136, SAND SPRINGS
OKLAHOMA, 74063
TEL: (918) 514-4283
FAX: (918) 514-4288

QT REAL ESTATE PROJECT MANAGER
QUIKTRIP CORPORATION
CARLY GOODNIGHT
4705 SOUTH 129TH EAST AVENUE
TULSA, OKLAHOMA, 74134
TEL: (918)615-7137
EMAIL: CGOODNIG@QUIKTRIP.COM

QT CIVIL PROJECT MANAGER
QUIKTRIP CORPORATION
TIM KELLY, P.E.
4705 SOUTH 129TH EAST AVENUE
TULSA, OKLAHOMA 74134
TEL: (918)615-7432
EMAIL: TKELLY@QUIKTRIP.COM

BEFORE YOU DIG... CALL OKIE
1-800-522-6543

SHEET INDEX

Sheet	Sheet Title
C001	COVER SHEET
C030	DEMOLITION PLAN
C100	SITE PLAN
C110	GRADING PLAN
C111	DETAILED GRADING PLANS
C112	DETAILED CANOPY GRADING PLAN
C113	ADA COMPLIANCE REFERENCE PLAN
C120	STORM PLAN
C121	DRAINAGE AREA MAP
C130	PAVING PLAN
C131	BUILDING PAVING PLAN
C140	EROSION CONTROL PLAN PHASE 1
C141	EROSION CONTROL PLAN PHASE 2
C142	EROSION CONTROL DETAILS
C150	UTILITY PLAN
C151	WATERLINE PLAN AND PROFILE
C170	SECURITY PLAN
C300	STORM SEWER PROFILES
C500	MISC. SITE DETAILS
C510	ADA DETAILS
C511	ADA DETAILS
C520	PAVING DETAILS
C521	PAVING DETAILS
C522	PAVING DETAILS
C523	PAVING DETAILS
C530	TRENCHING DETAILS
C531	TRENCHING DETAILS
C540	DRAINAGE DETAILS
L100	LANDSCAPE PLAN
L110	IRRIGATION PLANS
L500	LANDSCAPE DETAILS
L510	IRRIGATION DETAILS

LICENSED PROFESSIONAL ENGINEER
Alan Betchan
25330
OKLAHOMA

PROJECT NO.:

AAB Engineering, LLC
Engineering • Surveying
P.O. Box 2136,
Sand Springs, OK 74063
OK CA#6318 Exp: June 30, 2018
Office: (918) 514-4283
Fax: (918) 514-4288

QuikTrip No. 0033
2400 E. KENOSHA ST.
BROKEN ARROW, OK

© COPYRIGHT QUIKTRIP CORPORATION 2011
ANY UNAUTHORIZED USE, REPRODUCTION, PUBLICATION, DISTRIBUTION, OR SALE IN WHOLE OR IN PART, IS STRICTLY FORBIDDEN.

PROTOTYPE: P-91 (05/02/2017)
DIVISION: BROKEN ARROW
VERSION: 001
DESIGNED BY: AAB
DRAWN BY: KMT
REVIEWED BY:

REV	DATE	DESCRIPTION

CONSTRUCTION SET ISSUE DATE:

SHEET TITLE:
COVER SHEET
DD# XXXXXX

SHEET NUMBER:
C001

FILE LOCATION:P:\1815\06-QT 0033\01-0033 Civil.dwg TAB NAME:Cover USER:Clint SAVED:8/14/2017 12:38 PM PLOTTED:8/15/2017 1:29 PM

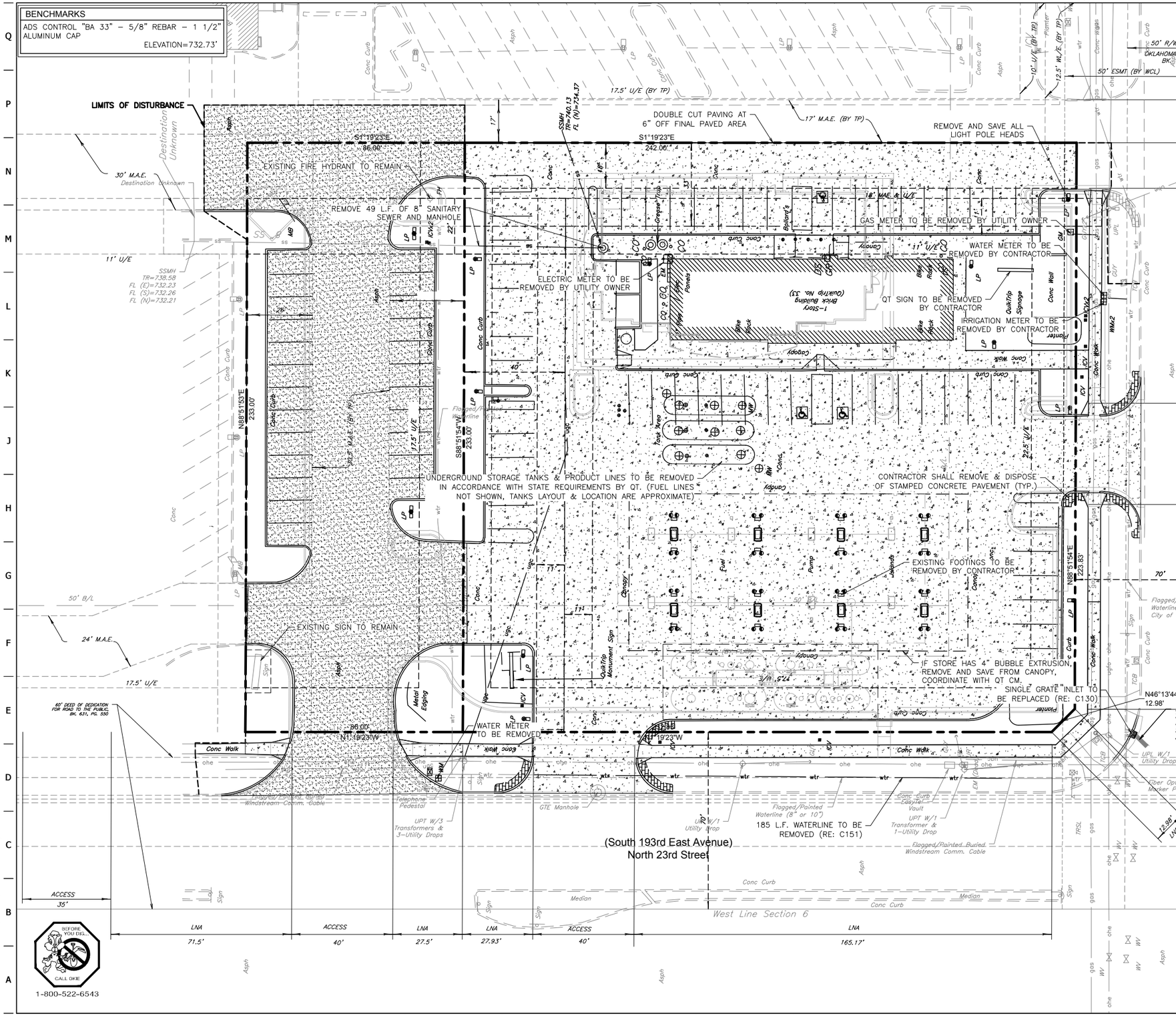

EXISTING ITEMS

- UNDERGROUND CABLE
- OVERHEAD ELECTRIC
- GAS LINE (PLUS SIZE/TYPE ON PLANS)
- SANITARY SEWER LINE (PLUS SIZE/TYPE ON PLANS)
- STORM SEWER LINE (≥12") (PLUS SIZE/TYPE ON PLANS)
- WATER LINE (PLUS SIZE/TYPE ON PLANS)
- UTILITY PEDESTAL/RISER–PLUS TYPE OF UTILITY
- UTILITY POLE–PLUS TYPE OF UTILITY
- UTILITY POLE W/LIGHT
- UTILITY POLE W/TRANSFORMER
- UTILITY MANHOLE (PLUS TYPE/Ę'S)
- UTILITY METER (PLUS TYPE)
- UTILITY VALVE (PLUS TYPE)
- UTILITY CLEAN OUT (PLUS TYPE/SIZE)
- GUY WIRE
- LIGHT POLE (PLUS # HEADS/ DIRECTION SHOWN GRAPHICALLY)
- FIRE HYDRANT
- SINGLE POST SIGN (PLUS TYPE/VERBIAGE)
- TRAFFIC SIGNAL W/MAST ARM
- TRAFFIC SIGNAL
- TRAFFIC CONTROL BOX
- MAIL BOX
- MONITOR WELL
- MPD (MULTIPLE PRODUCT DISPENSER)
- BOLLARD
- PROPERTY R/W LINE (QT NET)
- SECTION LINE
- CURB LINE
- EDGE OF ASPHALT
- EDGE OF CONCRETE
- WALL
- EXISTING STRUCTURE (PLUS MATERIAL. SF, # STORIES)
- UNDERGROUND STORAGE TANK (PLUS SIZE/PRODUCT IF AVAILABLE)
- ABOVEGROUND STORAGE TANK (HORIZONTAL) (PLUS SIZE/PRODUCT IF AVAILABLE)
- ABOVEGROUND STORAGE TANK (VERTICAL) (PLUS SIZE/PRODUCT IF AVAILABLE)

EXISTING LEGEND (ITEMS TO BE REMOVED)

- WATER LINE
- SANITARY SEWER LINE
- GAS LINE
- TOP OF CURB AND GUTTER
- LIGHT POLE
- UTILITY METER
- UTILITY MANHOLE
- POWER POLE
- POWER POLE W/TRANSFORMER
- GUY WIRE
- CONCRETE (PAVEMENT/SIDEWALK)
- ASPHALT
- SANITARY SEWER CLEANOUT
- AIR CONDITIONING UNIT
- DOWN SPOUT
- MULTIPLE PRODUCT DISPENSER WITH CANOPY COLUMNS AND BOLLARDS

LICENSED PROFESSIONAL ENGINEER Alan Betchan 25330 OKLAHOMA

PROJECT NO.:

AAB Engineering, LLC
Engineering • Surveying
P.O. Box 2136, Sand Springs, OK 74063
OK CA#6318 Exp: June 30, 2018
Office: (918) 514-4283
Fax: (918) 514-4288

QuikTrip No. 0033

2400 E. KENOSHA ST.
BROKEN ARROW, OK

© COPYRIGHT QUIKTRIP CORPORATION 2011 ANY UNAUTHORIZED USE, REPRODUCTION, PUBLICATION, DISTRIBUTION, OR SALE IN WHOLE OR IN PART, IS STRICTLY FORBIDDEN.

PROTOTYPE:	P-91 (05/02/2017)
DIVISION:	BROKEN ARROW
VERSION:	001
DESIGNED BY:	AAB
DRAWN BY:	KMT
REVIEWED BY:	

REV	DATE	DESCRIPTION

CONSTRUCTION SET ISSUE DATE:

SHEET TITLE:
DEMOLITION PLAN

SHEET NUMBER:
C030

FILE LOCATION:P:\1815\06-QT 0033\01-0033 Civil.dwg TAB NAME:Demo USER:Clint SAVED:8/14/2017 12:38 PM PLOTTED:8/15/2017 1:29 PM

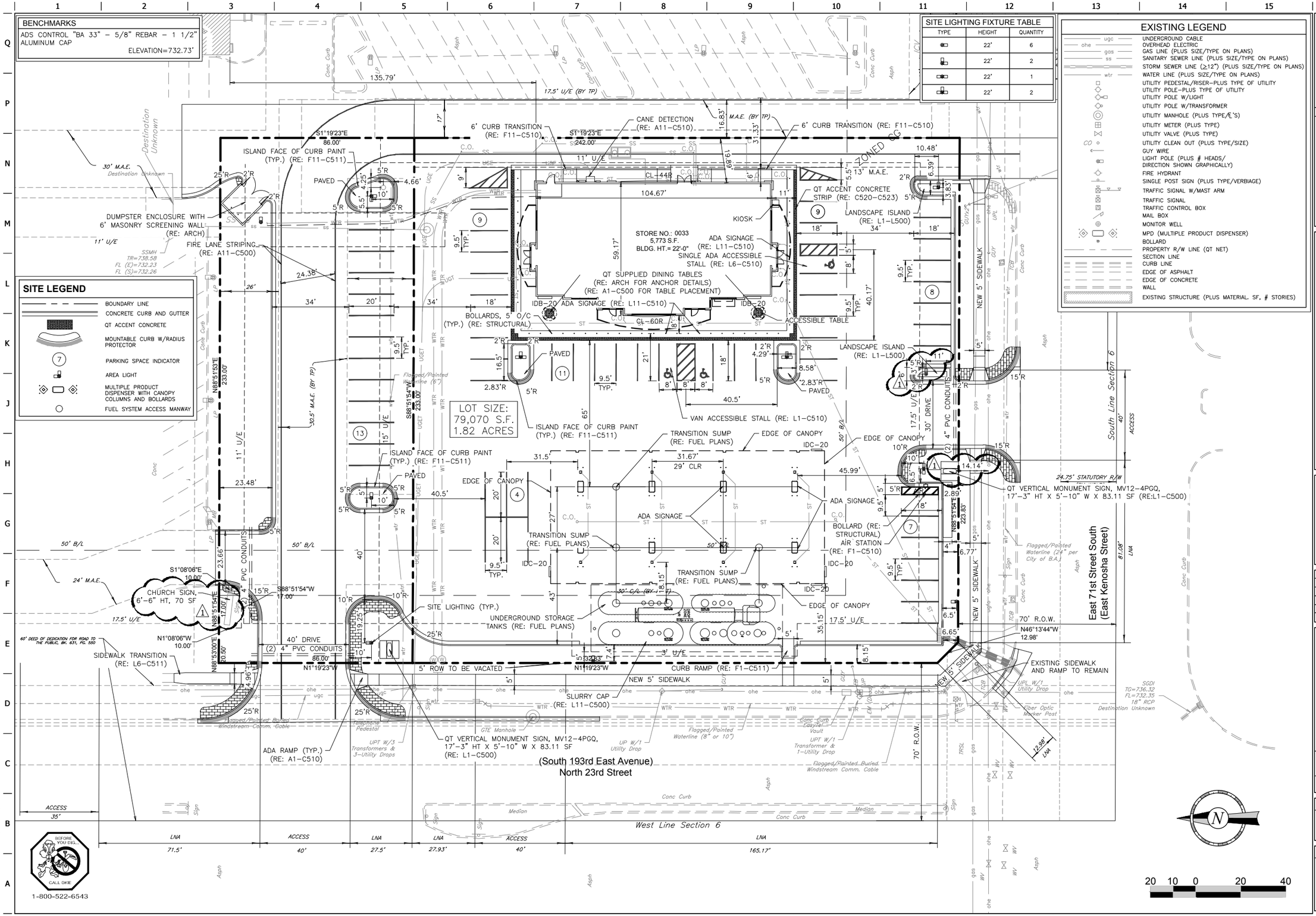

LICENSED PROFESSIONAL ENGINEER Alan Betchan 25330 OKLAHOMA

PROJECT NO.:

AAB Engineering, LLC
Engineering • Surveying
P.O. Box 2136, Sand Springs, OK 74063
OK CA#6318 Exp: June 30, 2018
Office: (918) 514-4283
Fax: (918) 514-4288

QuikTrip No. 0033

2400 E. KENOSHA ST.
BROKEN ARROW, OK

© COPYRIGHT QUIKTRIP CORPORATION 2011 ANY UNAUTHORIZED USE, REPRODUCTION, PUBLICATION, DISTRIBUTION, OR SALE IN WHOLE OR IN PART, IS STRICTLY FORBIDDEN.

PROTOTYPE: P-91 (05/02/2017)
DIVISION: BROKEN ARROW
VERSION: 001
DESIGNED BY: AAB
DRAWN BY: KMT
REVIEWED BY:

REV	DATE	DESCRIPTION
1	7/24/17	REV. SIGN NAME, QT SIGN & LIGHT LOCATION

CONSTRUCTION SET ISSUE DATE:

SHEET TITLE:
SITE PLAN

SHEET NUMBER:
C100

FILE LOCATION:P:\1815\06-QT 0033\01-0033 Civil.dwg TAB NAME:Site USER:Clint SAVED:8/14/2017 12:38 PM PLOTTED:8/15/2017 1:29 PM

BENCHMARKS

ADS CONTROL "BA 33" – 5/8" REBAR – 1 1/2" ALUMINUM CAP

ELEVATION=732.73'

GRADING LEGEND

ST	STORM PIPE (< 10" NEW)
	STORM PIPE (> 12" NEW)
	STORM PIPE (> 12" EXISTING)
FD	FRENCH DRAIN
CD	BACK OF CURB DRAIN
ADA	ADA PATH OF TRAVEL
XXXX	MAJOR CONTOUR (NEW)
XXXX	MINOR CONTOUR (NEW)
XXX	MAJOR CONTOUR (EXISTING)
XXX	MINOR CONTOUR (EXISTING)
	LIMITS OF DISTURBANCE
TC XXXX.XX / G XXXX.XX	TOP OF CURB ELEVATION (NEW) / GUTTER ELEVATION (NEW)
FG XXXX.XX	FINISHED GRADE ELEVATION (NEW)
FG XXXX.XX	SPOT ELEVATION (EXISTING)
	STORM GRATE (NEW)

MISCELLANEOUS GRADING NOTES

1. GAS CANOPY INSTALLER SHALL INSTALL THE CANOPY COLUMN DRAIN PIPE AND OVERFLOW FITTING. THE STORM WATER INSTALLER SHALL CONNECT THEIR PIPING TO THE GAS INSTALLER'S OVERFLOW FITTING.
2. TO AVOID ANY DEFINED CRESTS OR SUMPS, "GRADE BREAKS" SHALL BE CONSTRUCTED AS A "VERTICAL CURVE". SURVEYOR & CONTRACTOR SHALL CONFER WITH QUIKTRIP CONSTRUCTION MANAGER PRIOR TO CONSTRUCTION STAKING OR CONCRETE PLACEMENT RELATIVE TO ANY GRADE BREAKS.
3. WHEN PLAN GRADES DEPICT RUNOFF TO BE DIRECTED AWAY FROM THE CURB, USE DRAIN AWAY CURB ALTERNATE. (RE: "CURB DETAIL–BARRIER" PD009A00X DETAIL)

VERTICAL CURVE AT GRADE BREAK NOTES

1. TO AVOID ANY DEFINED CRESTS OR SUMPS, "GRADE BREAKS" SHALL BE CONSTRUCTED AS A "VERTICAL CURVE". SURVEYOR & CONTRACTOR SHALL CONFER WITH QUIKTRIP CONSTRUCTION MANAGER PRIOR TO CONSTRUCTION STAKING OR CONCRETE PLACEMENT RELATIVE TO ANY GRADE BREAKS.
2. GRADE TRANSITIONS IN THE CURB LINE SHOULD NOT BE SHARP. VERTICAL CURVES SHOULD BE CONSTRUCTED TO SOFTEN THE ABRUPT CHANGE IN GRADE. THE VERTICAL CURVE SHALL BE APPROXIMATED BY SPOT ELEVATIONS IN 10' INCREMENTS ON THE GRADING PLAN. ABSOLUTE CHANGE IN GRADE SHALL NOT EXCEED 4%. THIS HOLDS FOR BOTH CRESTS AND SUMPS IN THE CURB AND GUTTER.

TC 100.15 / G 99.65 — 3% — 10' — 10' — 3% — TC 100.00 / G 99.50 — TC 100.00 / G 99.50

LICENSED PROFESSIONAL ENGINEER — Alan Betchan — 25330 — OKLAHOMA

PROJECT NO.:

AAB Engineering, LLC

Engineering • Surveying

P.O. Box 2136, Sand Springs, OK 74063

OK CA#6318 Exp: June 30, 2018

Office: (918) 514-4283

Fax: (918) 514-4288

QuikTrip No. 0033

2400 E. KENOSHA ST.
BROKEN ARROW, OK

© COPYRIGHT QUIKTRIP CORPORATION 2011 ANY UNAUTHORIZED USE, REPRODUCTION, PUBLICATION, DISTRIBUTION, OR SALE IN WHOLE OR IN PART, IS STRICTLY FORBIDDEN.

PROTOTYPE: P-91 (05/02/2017)
DIVISION: BROKEN ARROW
VERSION: 001
DESIGNED BY: AAB
DRAWN BY: KMT
REVIEWED BY:

REV	DATE	DESCRIPTION

CONSTRUCTION SET ISSUE DATE:

SHEET TITLE: GRADING PLAN

SHEET NUMBER: C110

FILE LOCATION:P:\1815\06-QT 0033\01-0033 Civil.dwg TAB NAME:Grading USERC:lint SAVED:8/14/2017 12:38 PM PLOTTED:8/15/2017 1:29 PM

BEFORE YOU DIG... CALL OKIE 1-800-522-6543

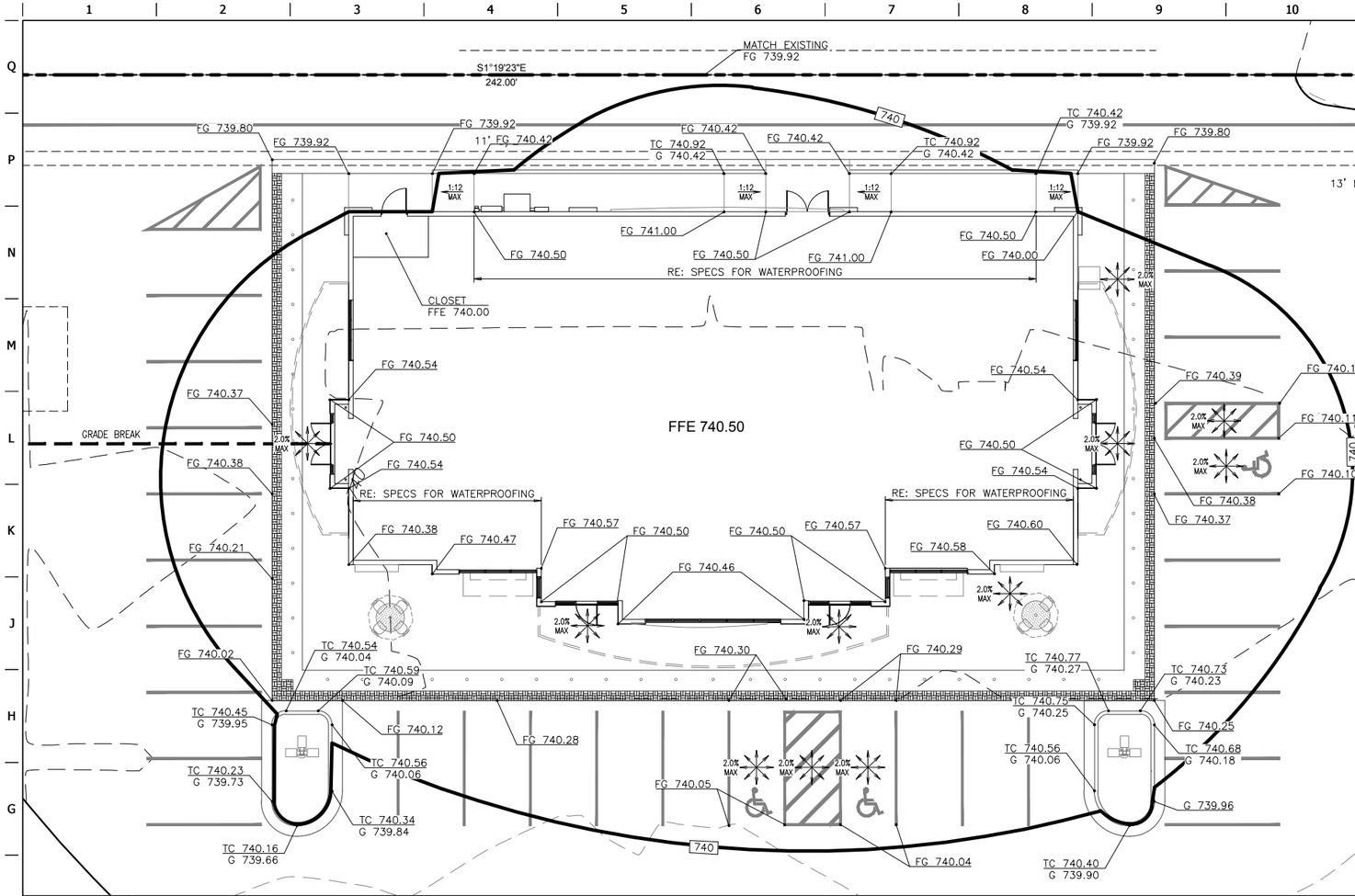

F1 BUILDING ISLAND GRADING DETAIL

1"=10'

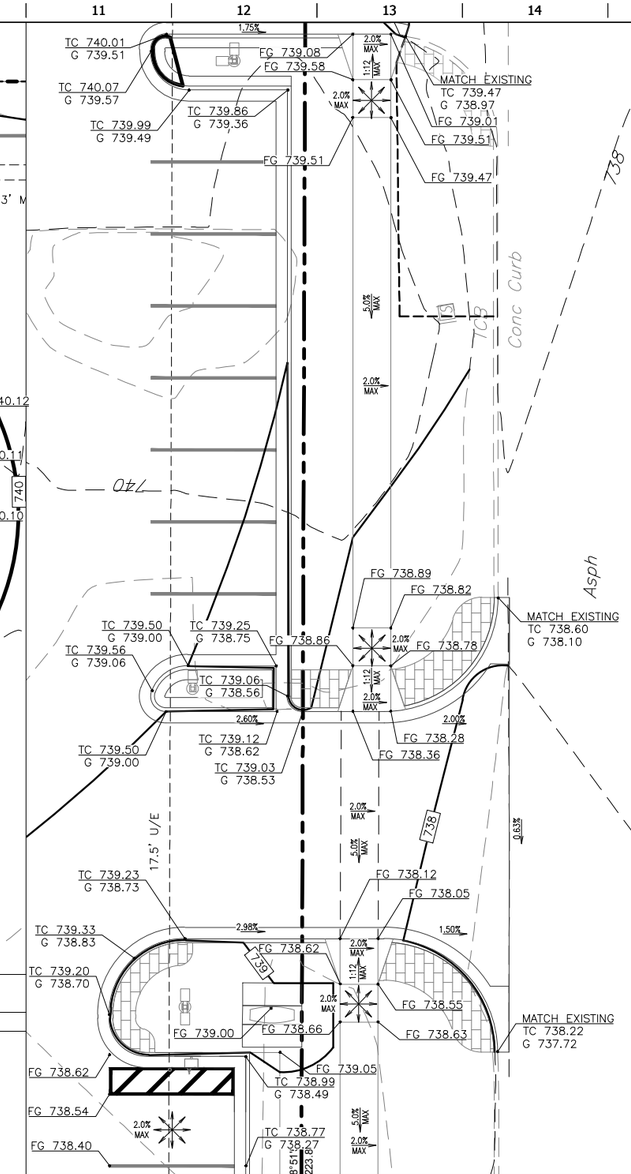

D11 71ST ST. DRIVE ADA GRADING DETAIL

1"=10'

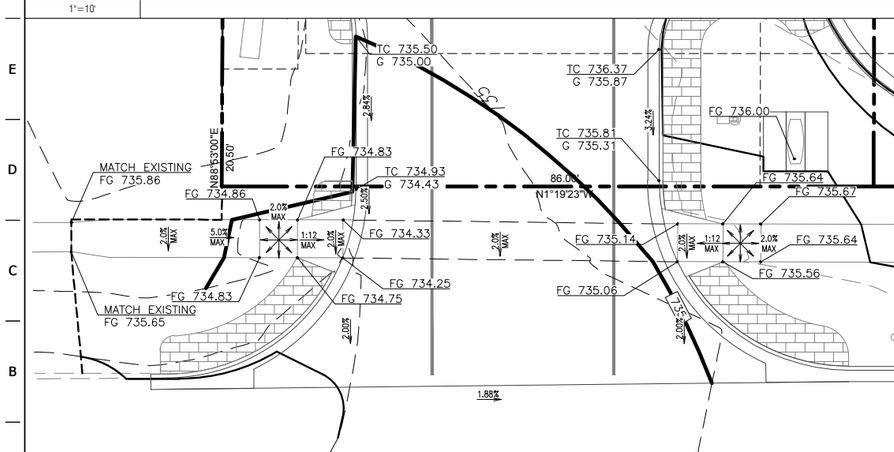

A1 NORTH 23RD STREET DRIVE ADA GRADING DETAIL

1"=10'

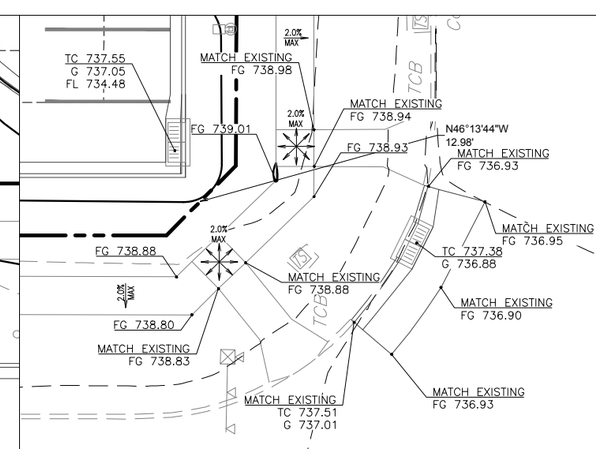

A8 INTERSECTION ADA GRADING DETAIL

1"=10'

PRIOR TO PLACING FRAMEWORK ON COMPLEX ADA RAMP DESIGNS, CONTRACTOR SHALL SUBMIT AN RFI WITH ADDITIONAL SURVEY DATA TO THE CONSULTANT. CONSULTANT WILL FINALIZE RAMP DESIGN AND RESPOND TO THE RFI.

GRADING LEGEND

- XXXX — MAJOR CONTOUR (NEW)
- XXXX — MINOR CONTOUR (NEW)
- XXX — MAJOR CONTOUR (EXISTING)
- XXX — MINOR CONTOUR (EXISTING)
- LIMITS OF DISTURBANCE
- TC XXXX.XX / G XXXX.XX — TOP OF CURB ELEVATION (NEW) / GUTTER ELEVATION (NEW)
- FG XXXX.XX — FINISHED GRADE ELEVATION (NEW)
- FG XXXX.XX — SPOT ELEVATION (EXISTING)
- STORM GRATE (NEW)

BENCHMARKS

ADS CONTROL "BA 33" – 5/8" REBAR – 1 1/2" ALUMINUM CAP

ELEVATION=732.73'

N

10 5 0 10 20

LICENSED PROFESSIONAL ENGINEER
Alan Betchan
25330
OKLAHOMA
Exp. 6-30-2018

PROJECT NO.:

AAB Engineering, LLC
Engineering • Surveying
P.O. Box 2136,
Sand Springs, OK 74063
OK CA#6318 Exp: June 30, 2018
Office: (918) 514-4283
Fax: (918) 514-4288

QuikTrip No. 0033

2400 E. KENOSHA ST.
BROKEN ARROW, OK

© COPYRIGHT QUIKTRIP CORPORATION 2011
ANY UNAUTHORIZED USE, REPRODUCTION, PUBLICATION, DISTRIBUTION, OR SALE IN WHOLE OR IN PART, IS STRICTLY FORBIDDEN.

PROTOTYPE: P-91 (05/02/2017)
DIVISION: BROKEN ARROW
VERSION: 001
DESIGNED BY: AAB
DRAWN BY: KMT
REVIEWED BY:

REV	DATE	DESCRIPTION

CONSTRUCTION SET ISSUE DATE:

SHEET TITLE:
DETAILED GRADING PLANS

SHEET NUMBER:
C111

FILE LOCATION:P:\1815\06-QT 0033\01-0033\Civil.dwg TAB NAME:Detailed Grading USER:Clint SAVED:8/14/2017 12:38 PM PLOTTED:8/15/2017 1:29 PM

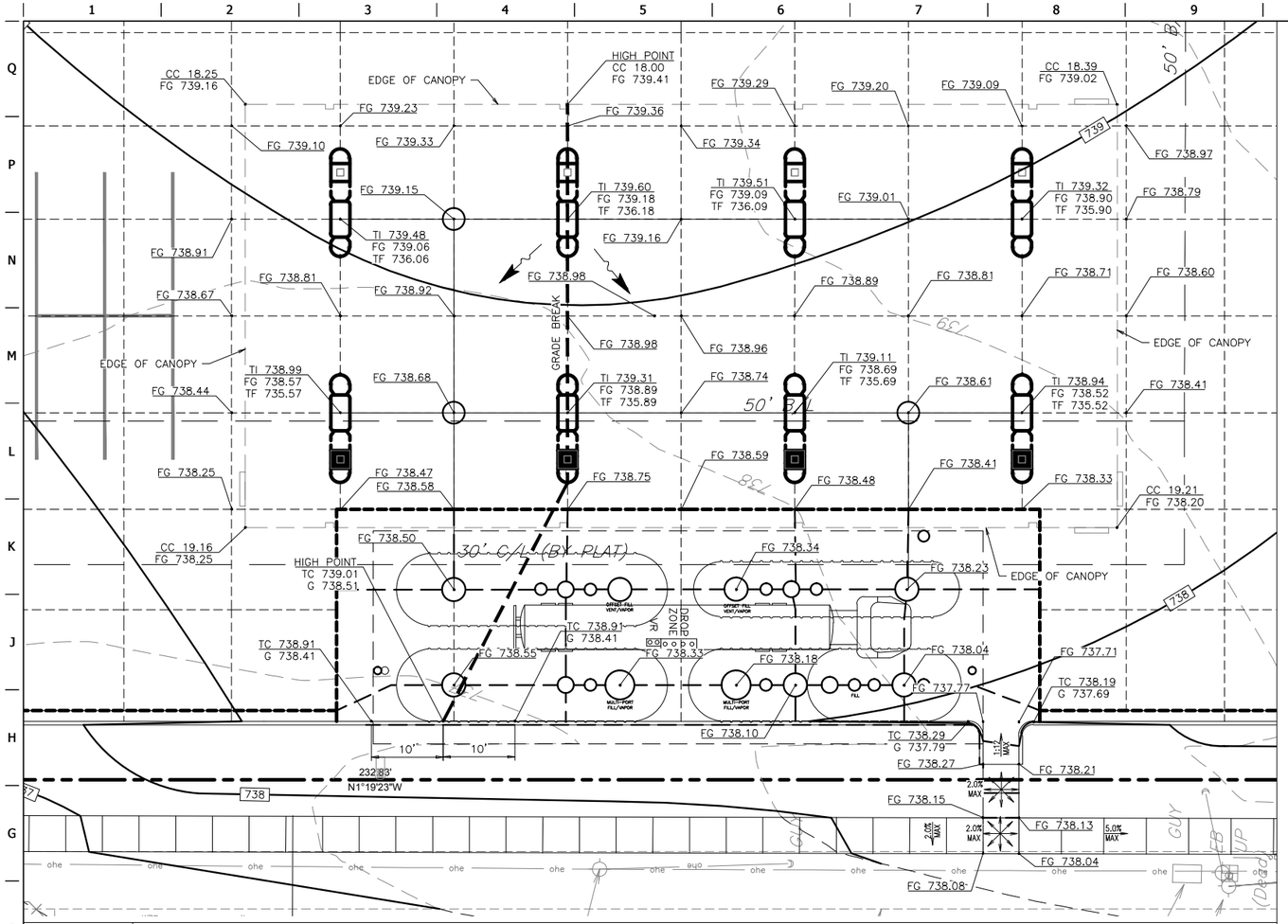

F1 FUEL CANOPY GRADING DETAIL

1"=10'

BENCHMARKS

ADS CONTROL "BA 33" – 5/8" REBAR – 1 1/2" ALUMINUM CAP

ELEVATION=732.73'

GRADING LEGEND

- XXXX — MAJOR CONTOUR (NEW)
- XXXX — MINOR CONTOUR (NEW)
- XXX — MAJOR CONTOUR (EXISTING)
- XXX — MINOR CONTOUR (EXISTING)
- LIMITS OF DISTURBANCE
- TC XXXX.XX / G XXXX.XX — TOP OF CURB ELEVATION (NEW) / GUTTER ELEVATION (NEW)
- FG XXXX.XX — FINISHED GRADE ELEVATION (NEW)
- CC XXXX.XX / FG XXXX.XX — CANOPY CLEARANCE ELEVATION (NEW) / FINISHED GRADE ELEVATION (NEW)
- TI XXXX.XX / TP XXXX.XX / TF XXXX.XX — TOP OF ISLAND ELEVATION (NEW) / TOP OF PAVEMENT ELEVATION (NEW) / TOP OF FOOTING ELEVATION (NEW)
- FG XXXX.XX — SPOT ELEVATION (EXISTING)

CANOPY COLUMN : EXTENDED FOOTING — STANDARD CANOPY COLUMN FOOTING

MULTIPLE PRODUCT DISPENSER WITH CANOPY COLUMNS AND BOLLARDS

MISCELLANEOUS GRADING NOTES

1. GAS CANOPY INSTALLER SHALL INSTALL THE CANOPY COLUMN DRAIN PIPE AND OVERFLOW FITTING. THE STORM WATER INSTALLER SHALL CONNECT THEIR PIPING TO THE GAS INSTALLER'S OVERFLOW FITTING.
2. TO AVOID ANY DEFINED CRESTS OR SUMPS, "GRADE BREAKS" SHALL BE CONSTRUCTED AS A "VERTICAL CURVE". SURVEYOR & CONTRACTOR SHALL CONFER WITH QUIKTRIP CONSTRUCTION MANAGER PRIOR TO CONSTRUCTION STAKING OR CONCRETE PLACEMENT RELATIVE TO ANY GRADE BREAKS.
3. WHEN PLAN GRADES DEPICT RUNOFF TO BE DIRECTED AWAY FROM THE CURB, USE DRAIN AWAY CURB ALTERNATE. (RE: "CURB DETAIL–BARRIER" PD009A00X DETAIL)

BEFORE YOU DIG... CALL OKIE 1-800-522-6543

N

10 5 0 10 20

LICENSED PROFESSIONAL ENGINEER Alan Betchan 25330 OKLAHOMA

PROJECT NO.:

AAB Engineering, LLC

Engineering • Surveying
P.O. Box 2136,
Sand Springs, OK 74063
OK CA#6318 Exp: June 30, 2018
Office: (918) 514-4283
Fax: (918) 514-4288

QuikTrip No. 0033

2400 E. KENOSHA ST.
BROKEN ARROW, OK

© COPYRIGHT QUIKTRIP CORPORATION 2011 ANY UNAUTHORIZED USE, REPRODUCTION, PUBLICATION, DISTRIBUTION, OR SALE IN WHOLE OR IN PART, IS STRICTLY FORBIDDEN.

PROTOTYPE: P-91 (05/02/2017)
DIVISION: BROKEN ARROW
VERSION: 001
DESIGNED BY: AAB
DRAWN BY: KMT
REVIEWED BY:

REV	DATE	DESCRIPTION

CONSTRUCTION SET ISSUE DATE:

SHEET TITLE: DETAILED CANOPY GRADING PLAN

SHEET NUMBER: C112

FILE LOCATION:P:\1815\06-QT 0033\01-0033 Civil.dwg TAB NAME:Canopy Grading USER:Clint SAVED:8/14/2017 12:38 PM PLOTTED:8/15/2017 1:29 PM

BENCHMARKS
ADS CONTROL "BA 33" – 5/8" REBAR – 1 1/2" ALUMINUM CAP ELEVATION=732.73'

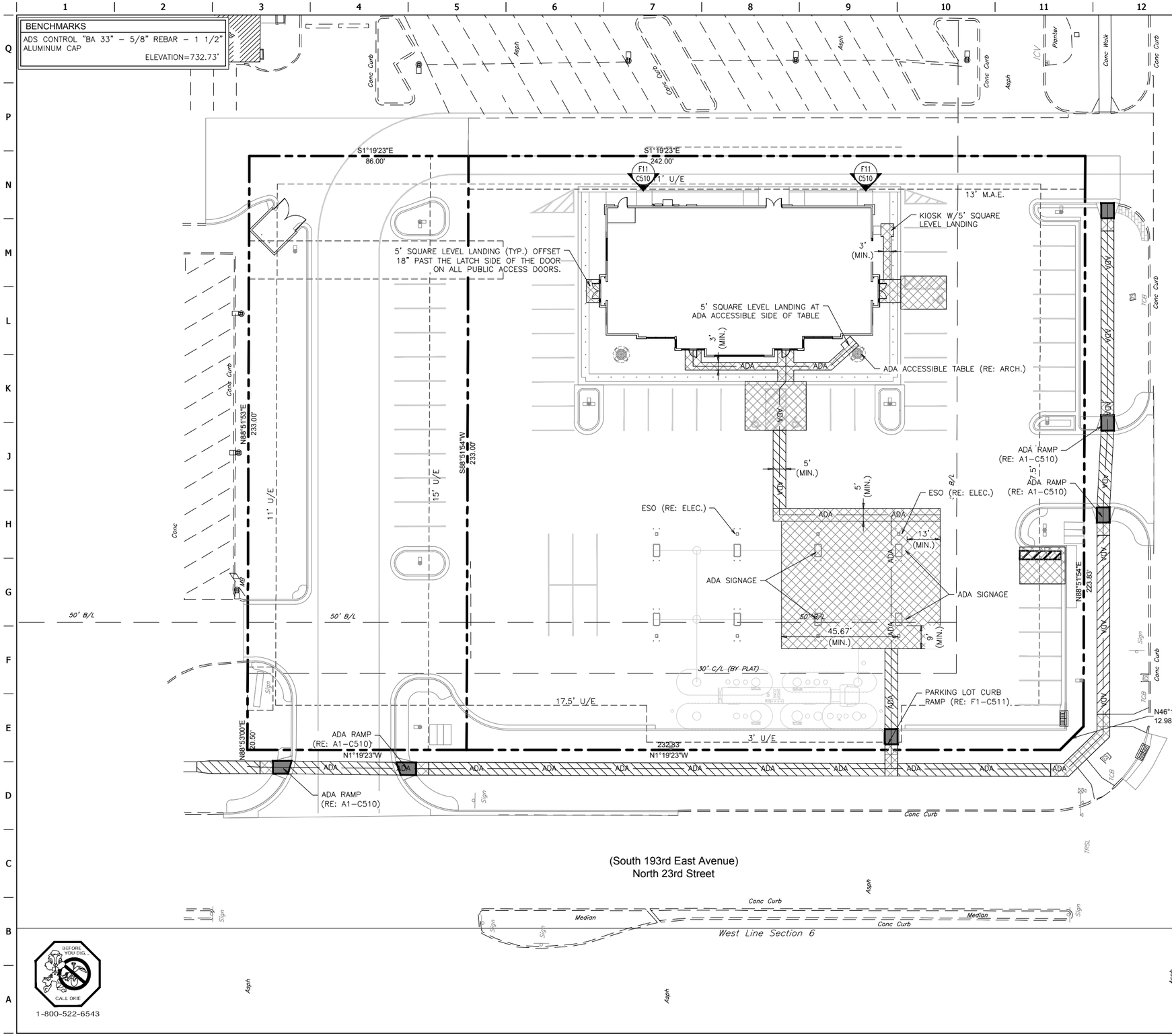

ADA GRADING LEGEND

ADA	ADA PATH OF TRAVEL (RE: HATCHING FOR RUNNING & CROSS SLOPE REQUIREMENT)
	HATCH INDICATES AREAS OF FEDERALLY MANDATED 2% MAXIMUM SLOPE IN ALL DIRECTIONS WHEN MEASURED WITH A 2' SMART LEVEL. THESE AREAS WILL BE FIELD VERIFIED BY THE OWNER. AREAS OUT OF COMPLIANCE WILL BE REMOVED AND REPLACED BY THE CONTRACTOR. (RE: GRADING PLAN SHEETS C110, C111 & C112 FOR SPECIFIC GRADES)
	HATCH INDICATES AREAS OF FEDERALLY MANDATED 2% MAXIMUM CROSS SLOPE AND 5% MAXIMUM RUNNING SLOPE WHEN MEASURED WITH A 2' SMART LEVEL. WHEN ADJACENT STREET GRADES EXCEED 5% AND SIDEWALKS ARE CONTAINED WITHIN THE PUBLIC R/W, THEN SIDEWALK RUNNING SLOPE CAN MATCH STREET GRADES. THESE AREAS WILL BE FIELD VERIFIED BY THE OWNER. AREAS OUT OF COMPLIANCE WILL BE REMOVED AND REPLACED BY THE CONTRACTOR. (RE: GRADING PLAN SHEET C110, C111 & C112 FOR SPECIFIC GRADES)
	HATCH INDICATES AREAS OF FEDERALLY MANDATED 2% MAXIMUM CROSS SLOPE AND 1:12 MAXIMUM RUNNING SLOPE WHEN MEASURED WITH A 2' SMART LEVEL. THESE AREAS WILL BE FIELD VERIFIED BY THE OWNER. AREAS OUT OF COMPLIANCE WILL BE REMOVED AND REPLACED BY THE CONTRACTOR. (RE: GRADING PLAN SHEET C110, C111 & C112 FOR SPECIFIC GRADES)

ADA GENERAL NOTES

1. ANY REQUEST BY A GOVERNING AUTHORITY OR INSPECTOR TO ALTER THE ADA COMPLIANCE DETAILS OR REQUIREMENTS DEPICTED IN THE QUIKTRIP PLANS AND SPECIFICATIONS MUST BE DIRECTED TO THE QUIKTRIP CONSTRUCTION MANAGER FOR AUTHORIZATION. ANY CHANGES MADE BY A PRIMARY OR SUB-CONTRACTOR WITHOUT AUTHORIZATION FROM THE QUIKTRIP CONSTRUCTION MANAGER AND LATER FOUND TO BE NON-COMPLIANT WITH THE DETAILS AS SHOWN IN THE QUIKTRIP PLANS AND SPECIFICATIONS WILL BE REMOVED AND REPLACED AND MADE FULLY COMPLIANT REGARDLESS OF MAGNITUDE AT THE PRIMARY AND/OR SUB-CONTRACTOR'S EXPENSE. THE PRIMARY SHALL FOLLOW THE RFI PROCESS IN ESTABLISHING THE APPROVAL OR DENIAL OF CHANGES TO ADA RELATED DETAILS OR MOUNTING DIMENSIONS.
2. RE: GRADING PLAN SHEETS C110, C111 & C112 FOR FINAL GRADES.
3. ALL NEW SIDEWALKS (INCLUDING SIDEWALKS TO BE REMOVED & REPLACED) SHALL NOT EXCEED 2% CROSS SLOPE & 5% RUNNING SLOPE. FOR SIDEWALKS CONTAINED WITHIN THE PUBLIC R/W AND WHEN ADJACENT STREET GRADES EXCEED 5%, THEN SIDEWALK RUNNING SLOPES MAY MATCH STREET GRADES.
4. 1/8" MAXIMUM DEPTH TO TOP OF SEALANT AND 1/8" MAXIMUM PROTRUSION TO TOP OF SEALANT ALONG ADA ACCESS ROUTES. (RE: PAVING DETAIL PD042A003)
5. PRIVATE PROPERTY RAMPS SHALL HAVE THE FACE OF THE CURB TRANSITIONS PAINTED YELLOW (RE: DETAIL AD015A002)

PARKING REQUIREMENTS

PARKING REQUIRED:	49
PARKING PROVIDED:	70
ACCESSIBLE PARKING REQUIRED:	3
ACCESSIBLE PARKING PROVIDED:	3

LICENSED PROFESSIONAL ENGINEER Alan Betchan 25330 OKLAHOMA

PROJECT NO.:

AAB Engineering, LLC
Engineering • Surveying
P.O. Box 2136,
Sand Springs, OK 74063
OK CA#6318 Exp: June 30, 2018
Office: (918) 514-4283
Fax: (918) 514-4288

QuikTrip No. 0033

2400 E. KENOSHA ST.
BROKEN ARROW, OK

© COPYRIGHT QUIKTRIP CORPORATION 2011 ANY UNAUTHORIZED USE, REPRODUCTION, PUBLICATION, DISTRIBUTION, OR SALE IN WHOLE OR IN PART, IS STRICTLY FORBIDDEN.

PROTOTYPE: P-91 (05/02/2017)
DIVISION: BROKEN ARROW
VERSION: 001
DESIGNED BY: AAB
DRAWN BY: KMT
REVIEWED BY:

REV	DATE	DESCRIPTION

CONSTRUCTION SET ISSUE DATE:

SHEET TITLE:
ADA COMPLIANCE REFERENCE PLAN

SHEET NUMBER:
C113

FILE LOCATION:P:\1815\06-QT 0033\01-0033 Civil.dwg TAB NAME:ADA USER:Clint SAVED:8/14/2017 12:38 PM PLOTTED:8/15/2017 1:29 PM

BENCHMARKS

ADS CONTROL "BA 33" – 5/8" REBAR – 1 1/2" ALUMINUM CAP

ELEVATION=732.73'

STRUCTURE SUMMARY TABLE

a	CICI DES. 2
b	DOUBLE GRATE DROP INLET (RE: F1–CS40)

STORM SEWER LEGEND

- ST — STORM PIPE (< 10" NEW)
- CD — BACK OF CURB DRAIN
- STORM PIPE (> 12" NEW)
- STORM PIPE (> 12" EXISTING)
- MAJOR CONTOUR (NEW)
- MINOR CONTOUR (NEW)
- XXX — MAJOR CONTOUR (EXISTING)
- XXX — MINOR CONTOUR (EXISTING)
- STORM GRATE (NEW)

STORM SEWER GENERAL NOTES

STORM SEWER INSTALLATION CONSIDERATIONS

PRIOR TO THE CONSTRUCTION OF, OR CONNECTION TO ANY STORM DRAIN OR ANY OTHER ELEVATION SENSITIVE UTILITY, THE CONTRACTOR SHALL EXCAVATE, VERIFY AND CALCULATE ALL POINTS OF CONNECTIONS AND ALL UTILITY CROSSINGS. THE CONTRACTOR SHALL INFORM THE ENGINEER AND THE OWNER OF ANY CONFLICT OR REQUIRED DEVIATIONS FROM THE PLAN. THE ENGINEER AND OWNER WILL BE HELD HARMLESS IN THE EVENT THE ENGINEER AND OWNER ARE NOT NOTIFIED OF A DESIGN CONFLICT.

ALL STORM SEWERS SHOWN ARE PRIVATE UNLESS OTHERWISE NOTED.

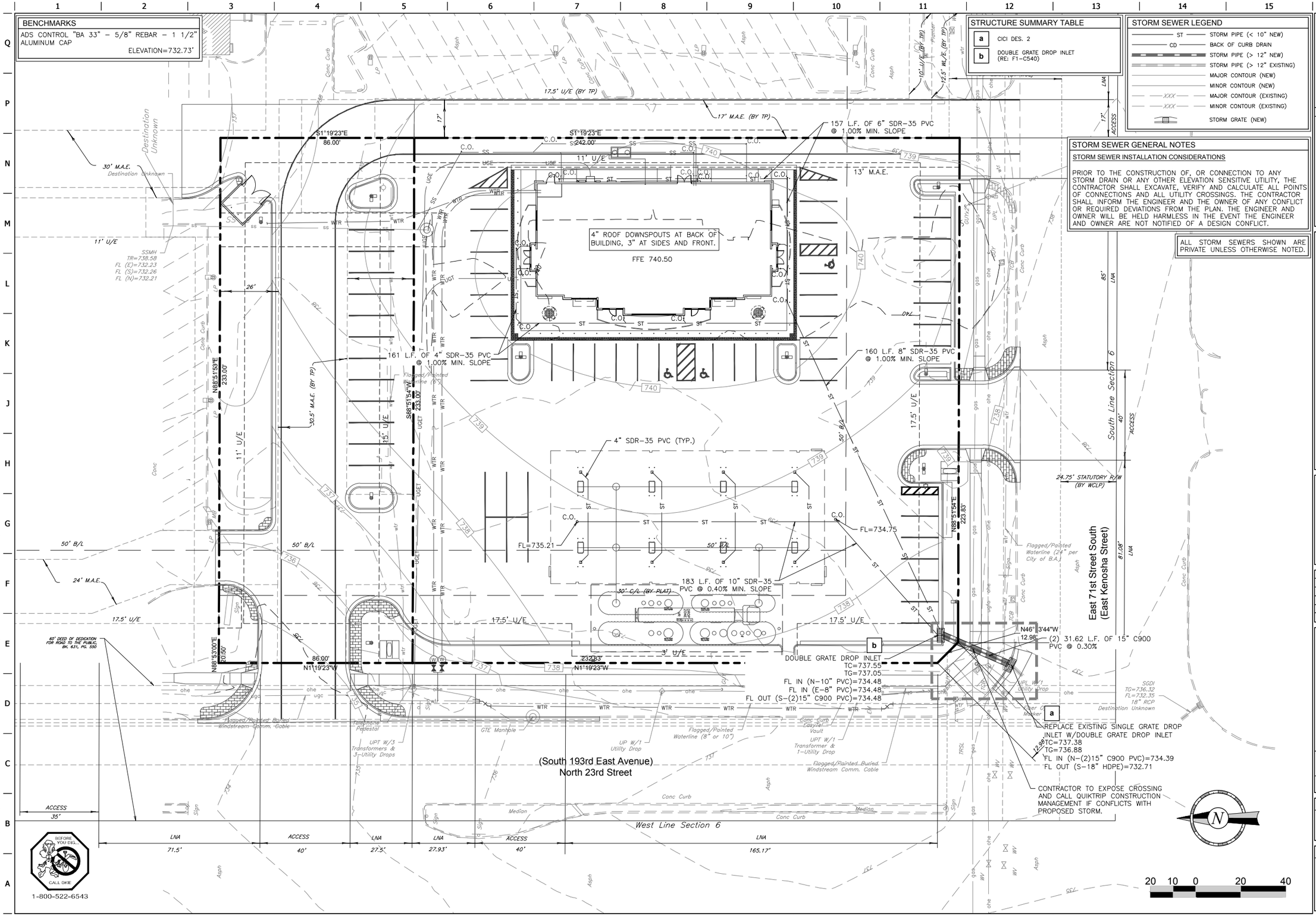

LICENSED PROFESSIONAL ENGINEER Alan Betchan 25330 OKLAHOMA

PROJECT NO.:

AAB Engineering, LLC
Engineering • Surveying
P.O. Box 2136, Sand Springs, OK 74063
OK CA#6318 Exp: June 30, 2018
Office: (918) 514-4283
Fax: (918) 514-4288

QuikTrip No. 0033

2400 E. KENOSHA ST.
BROKEN ARROW, OK

© COPYRIGHT QUIKTRIP CORPORATION 2011 ANY UNAUTHORIZED USE, REPRODUCTION, PUBLICATION, DISTRIBUTION, OR SALE IN WHOLE OR IN PART, IS STRICTLY FORBIDDEN.

PROTOTYPE: P-91 (05/02/2017)
DIVISION: BROKEN ARROW
VERSION: 001
DESIGNED BY: AAB
DRAWN BY: KMT
REVIEWED BY:

REV	DATE	DESCRIPTION

CONSTRUCTION SET ISSUE DATE:

SHEET TITLE: STORM PLAN

SHEET NUMBER: C120

FILE LOCATION:P:\1815\06-QT 0033\01-0033 Civil.dwg TAB NAME:Storm USER:Clint SAVED:8/14/2017 12:38 PM PLOTTED:8/15/2017 1:29 PM

BENCHMARKS

ADS CONTROL "BA 33" – 5/8" REBAR – 1 1/2" ALUMINUM CAP

ELEVATION=732.73'

STRUCTURE SUMMARY TABLE

a	CICI DES. 2
b	DOUBLE GRATE DROP INLET (RE: F1–CS40)

STORM SEWER LEGEND

- ST — STORM PIPE (< 10" NEW)
- CD — BACK OF CURB DRAIN
- STORM PIPE (> 12" NEW)
- STORM PIPE (> 12" EXISTING)
- MAJOR CONTOUR (NEW)
- MINOR CONTOUR (NEW)
- XXX — MAJOR CONTOUR (EXISTING)
- XXX — MINOR CONTOUR (EXISTING)
- STORM GRATE (NEW)

STORM SEWER GENERAL NOTES

STORM SEWER INSTALLATION CONSIDERATIONS

PRIOR TO THE CONSTRUCTION OF, OR CONNECTION TO ANY STORM DRAIN OR ANY OTHER ELEVATION SENSITIVE UTILITY, THE CONTRACTOR SHALL EXCAVATE, VERIFY AND CALCULATE ALL POINTS OF CONNECTIONS AND ALL UTILITY CROSSINGS. THE CONTRACTOR SHALL INFORM THE ENGINEER AND THE OWNER OF ANY CONFLICT OR REQUIRED DEVIATIONS FROM THE PLAN. THE ENGINEER AND OWNER WILL BE HELD HARMLESS IN THE EVENT THE ENGINEER AND OWNER ARE NOT NOTIFIED OF A DESIGN CONFLICT.

ALL STORM SEWERS SHOWN ARE PRIVATE UNLESS OTHERWISE NOTED.

R1

4" ROOF DOWNSPOUTS AT BACK OF BUILDING, 3" AT SIDES AND FRONT.

FFE 740.50

R2

A B C D E

(South 193rd East Avenue)

East 71st Street South (East Kenosha Street)

REPLACE SINGLE GRATE DROP INLET W/DOUBLE GRATE DROP INLET

DRAINAGE SUMMARY CHART

DRAINAGE AREA BASIN	INLET LABEL	DRAINAGE AREA (ACRES)	'C' (WEIGHTED)	OVERLAND REACH (FEET)	OVERLAND SLOPE (%)	OVERLAND VELOCITY (FPS)	WATERWAY REACH (FEET)	WATERWAY SLOPE (%)	WATERWAY VELOCITY (FPS)	PAVEMENT REACH (FEET)	PAVEMENT SLOPE (%)	PAVEMENT VELOCITY (FPS)	TOTAL T_C (MINUTES)	i_{100} (IN./HR.)	Q_{100} (CFS)	DESIGN 'C' (SUM AT INLET)	% SLOPE AT INLET	CLOGGING FACTOR	DEPTH @ INLET (FT)	INLET INTERCEPT (CFS)	INLET CAPACITY (CFS)	INLET BYPASS (CFS)	BYPASS TO INLET #	INLET DESIGN
A	a	0.39	0.86	–	–	–	–	–	–	302	1.32	2.34	2.16	11.59	3.9	3.9	SUMP	0.7	0.15	–	–	–	–	CICI DES. 2
B	b	0.28	0.95	–	–	–	–	–	–	287	1.35	2.36	2.03	11.65	3.1	3.1	SUMP	0.7	0.03	–	–	–	–	DOUBLE GRATE DROP INLET
C	–	0.61	0.95	–	–	–	–	–	–	261	2.70	3.34	1.30	12.01	7.0	7.0	SUMP	0.7	–	–	–	–	–	DISCHARGE INTO S. 193RD E. AVE.
D	–	0.26	0.95	–	–	–	–	–	–	229	1.00	2.03	1.88	11.72	2.9	2.9	SUMP	0.7	–	–	–	–	–	DISCHARGE INTO ADJACENT PARKING LOT
E	–	0.16	0.95	–	–	–	–	–	–	167	1.50	2.49	1.12	12.10	1.8	1.8	SUMP	0.7	–	–	–	–	–	DISCHARGE TO EAST 71ST STREET SOUTH
R1	–	0.13	0.95	–	–	–	–	–	–	–	–	–	–	12.72	1.6	1.6	SUMP	0.7	0.48	–	–	–	–	ROOF DRAIN TO INLET b
R2	–	0.17	0.95	–	–	–	–	–	–	–	–	–	–	12.72	2.1	2.1	SUMP	0.7	0.48	–	–	–	–	ROOF DRAIN TO INLET b

STORM SEWER SUMMARY TABLE

PIPE RUN FROM	PIPE RUN TO	SIZE (IN)	SLOPE (%)	FLOW (CFS)	CAPACITY (CFS)	V100 (FPS)	VHALF (FPS)	HGL DOWN (FT)	EGL DOWN (FT)	HGL UP (FT)	EGL UP (FT)
a	b	(2)15"	0.30	6.8	7.5	3.47	3.12	735.64	735.76	735.71	735.83
	b									735.86	735.97

BEFORE YOU DIG... CALL OKIE 1-800-522-6543

ACCESS 35'

20 10 0 20 40

PROJECT NO.:

AAB Engineering, LLC
Engineering • Surveying
P.O. Box 2136, Sand Springs, OK 74063
OK CA#6318 Exp: June 30, 2018
Office: (918) 514-4283
Fax: (918) 514-4288

QuikTrip No. 0033

2400 E. KENOSHA ST.
BROKEN ARROW, OK

© COPYRIGHT QUIKTRIP CORPORATION 2011 ANY UNAUTHORIZED USE, REPRODUCTION, PUBLICATION, DISTRIBUTION, OR SALE IN WHOLE OR IN PART, IS STRICTLY FORBIDDEN.

PROTOTYPE: P-91 (05/02/2017)
DIVISION: BROKEN ARROW
VERSION: 001
DESIGNED BY: AAB
DRAWN BY: KMT
REVIEWED BY:

REV	DATE	DESCRIPTION

CONSTRUCTION SET ISSUE DATE:

SHEET TITLE: DRAINAGE AREA MAP

SHEET NUMBER: C121

FILE LOCATION:P:\1815\06-QT 0033\01-0033 Civil.dwg TAB NAME:Drainage Area Map USER:Clint SAVED:8/14/2017 12:38 PM PLOTTED:8/15/2017 1:29 PM

BENCHMARKS
ADS CONTROL "BA 33" – 5/8" REBAR – 1 1/2" ALUMINUM CAP
ELEVATION=732.73'

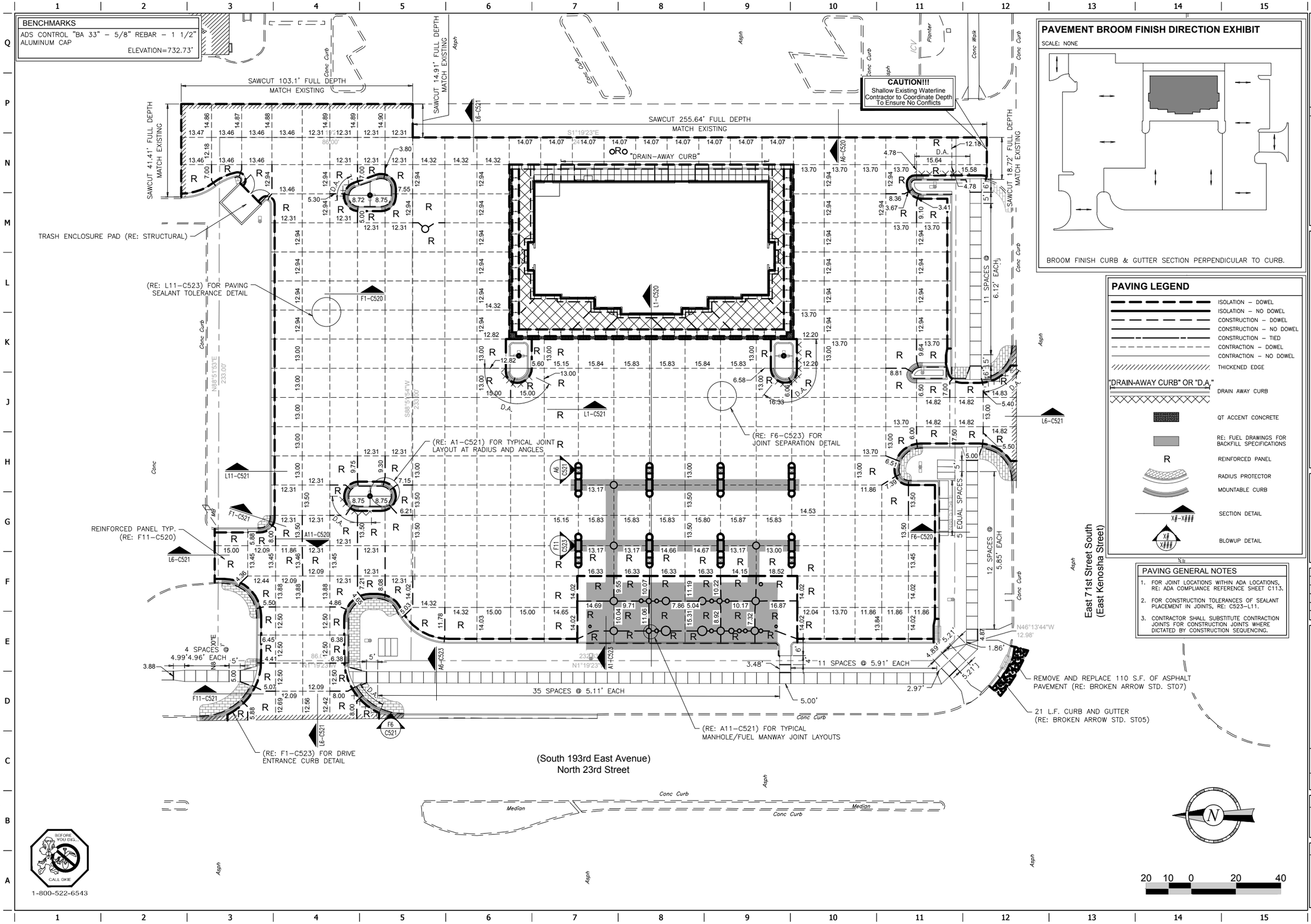

PAVEMENT BROOM FINISH DIRECTION EXHIBIT

SCALE: NONE

BROOM FINISH CURB & GUTTER SECTION PERPENDICULAR TO CURB.

PAVING LEGEND

- ISOLATION – DOWEL
- ISOLATION – NO DOWEL
- CONSTRUCTION – DOWEL
- CONSTRUCTION – NO DOWEL
- CONSTRUCTION – TIED
- CONTRACTION – DOWEL
- CONTRACTION – NO DOWEL
- THICKENED EDGE
- "DRAIN-AWAY CURB" OR "D.A." — DRAIN AWAY CURB
- QT ACCENT CONCRETE
- RE: FUEL DRAWINGS FOR BACKFILL SPECIFICATIONS
- R — REINFORCED PANEL
- RADIUS PROTECTOR
- MOUNTABLE CURB
- X#–X#### — SECTION DETAIL
- X# / X#### — BLOWUP DETAIL

PAVING GENERAL NOTES

1. FOR JOINT LOCATIONS WITHIN ADA LOCATIONS, RE: ADA COMPLIANCE REFERENCE SHEET C113.
2. FOR CONSTRUCTION TOLERANCES OF SEALANT PLACEMENT IN JOINTS, RE: C523–L11.
3. CONTRACTOR SHALL SUBSTITUTE CONTRACTION JOINTS FOR CONSTRUCTION JOINTS WHERE DICTATED BY CONSTRUCTION SEQUENCING.

BEFORE YOU DIG... CALL OKIE 1-800-522-6543

20 10 0 20 40

LICENSED PROFESSIONAL ENGINEER Alan Betchan 25330 OKLAHOMA

PROJECT NO.:

AAB Engineering, LLC
Engineering • Surveying
P.O. Box 2136, Sand Springs, OK 74063
OK CA#6318 Exp: June 30, 2018
Office: (918) 514-4283
Fax: (918) 514-4288

QuikTrip No. 0033

2400 E. KENOSHA ST.
BROKEN ARROW, OK

© COPYRIGHT QUIKTRIP CORPORATION 2011 ANY UNAUTHORIZED USE, REPRODUCTION, PUBLICATION, DISTRIBUTION, OR SALE IN WHOLE OR IN PART, IS STRICTLY FORBIDDEN.

PROTOTYPE: P-91 (05/02/2017)
DIVISION: BROKEN ARROW
VERSION: 001
DESIGNED BY: AAB
DRAWN BY: KMT
REVIEWED BY:

REV	DATE	DESCRIPTION

CONSTRUCTION SET ISSUE DATE:

SHEET TITLE: PAVING PLAN

SHEET NUMBER: C130

FILE LOCATION:P:\1815\06-QT 0033\01-0033 Civil.dwg TAB NAME:Paving USER:Clint SAVED:8/14/2017 12:38 PM PLOTTED:8/15/2017 1:29 PM

BENCHMARKS

ADS CONTROL "BA 33" – 5/8" REBAR – 1 1/2" ALUMINUM CAP

ELEVATION=732.73'

PAVING GENERAL NOTES

1. FOR JOINT LOCATIONS WITHIN ADA LOCATIONS, RE: ADA COMPLIANCE REFERENCE SHEET C113.
2. FOR CONSTRUCTION TOLERANCES OF SEALANT PLACEMENT IN JOINTS, RE: C523–L11.
3. CONTRACTOR SHALL SUBSTITUTE CONTRACTION JOINTS FOR CONSTRUCTION JOINTS WHERE DICTATED BY CONSTRUCTION SEQUENCING.

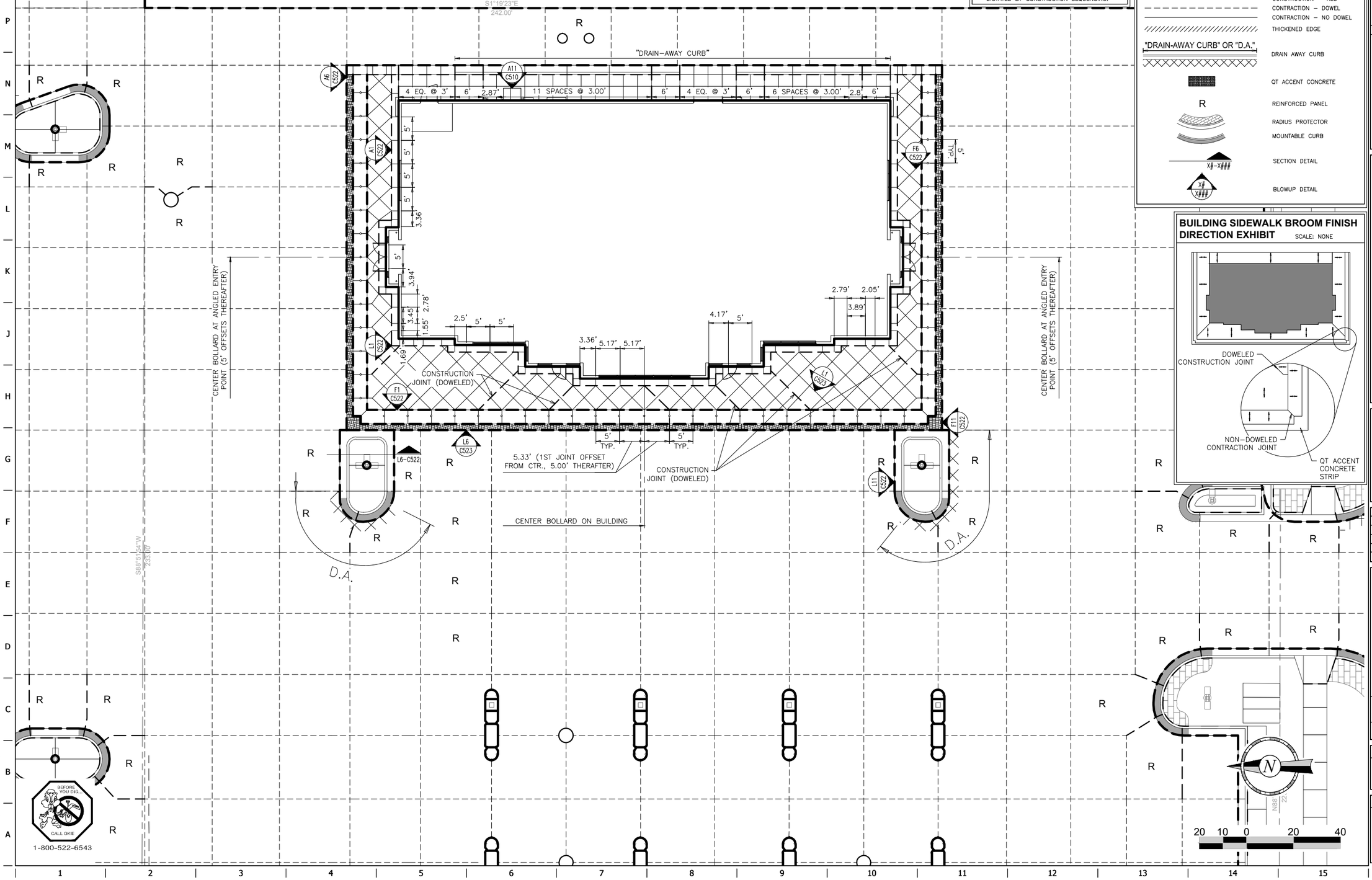

PAVING LEGEND

- ISOLATION – DOWEL
- ISOLATION – NO DOWEL
- CONSTRUCTION – DOWEL
- CONSTRUCTION – NO DOWEL
- CONSTRUCTION – TIED
- CONTRACTION – DOWEL
- CONTRACTION – NO DOWEL
- THICKENED EDGE
- "DRAIN-AWAY CURB" OR "D.A." — DRAIN AWAY CURB
- QT ACCENT CONCRETE
- R — REINFORCED PANEL
- RADIUS PROTECTOR
- MOUNTABLE CURB
- X# — SECTION DETAIL
- X# X# — BLOWUP DETAIL

BUILDING SIDEWALK BROOM FINISH DIRECTION EXHIBIT

SCALE: NONE

LICENSED PROFESSIONAL ENGINEER Alan Betchan 25330 OKLAHOMA

PROJECT NO.:

AAB Engineering, LLC

Engineering • Surveying

P.O. Box 2136, Sand Springs, OK 74063
OK CA#6318 Exp: June 30, 2018
Office: (918) 514-4283
Fax: (918) 514-4288

QuikTrip No. 0033

2400 E. KENOSHA ST.
BROKEN ARROW, OK

© COPYRIGHT QUIKTRIP CORPORATION 2011 ANY UNAUTHORIZED USE, REPRODUCTION, PUBLICATION, DISTRIBUTION, OR SALE IN WHOLE OR IN PART, IS STRICTLY FORBIDDEN.

PROTOTYPE:	P-91 (05/02/2017)
DIVISION:	BROKEN ARROW
VERSION:	001
DESIGNED BY:	AAB
DRAWN BY:	KMT
REVIEWED BY:	

REV	DATE	DESCRIPTION

CONSTRUCTION SET ISSUE DATE:

SHEET TITLE:

BUILDING PAVING PLAN

SHEET NUMBER:

C131

FILE LOCATION:P:\1815\06-QT 0033\01-0033 Civil.dwg TAB NAME:Building Paving USER:Clint SAVED:8/14/2017 12:38 PM PLOTTED:8/15/2017 1:29 PM

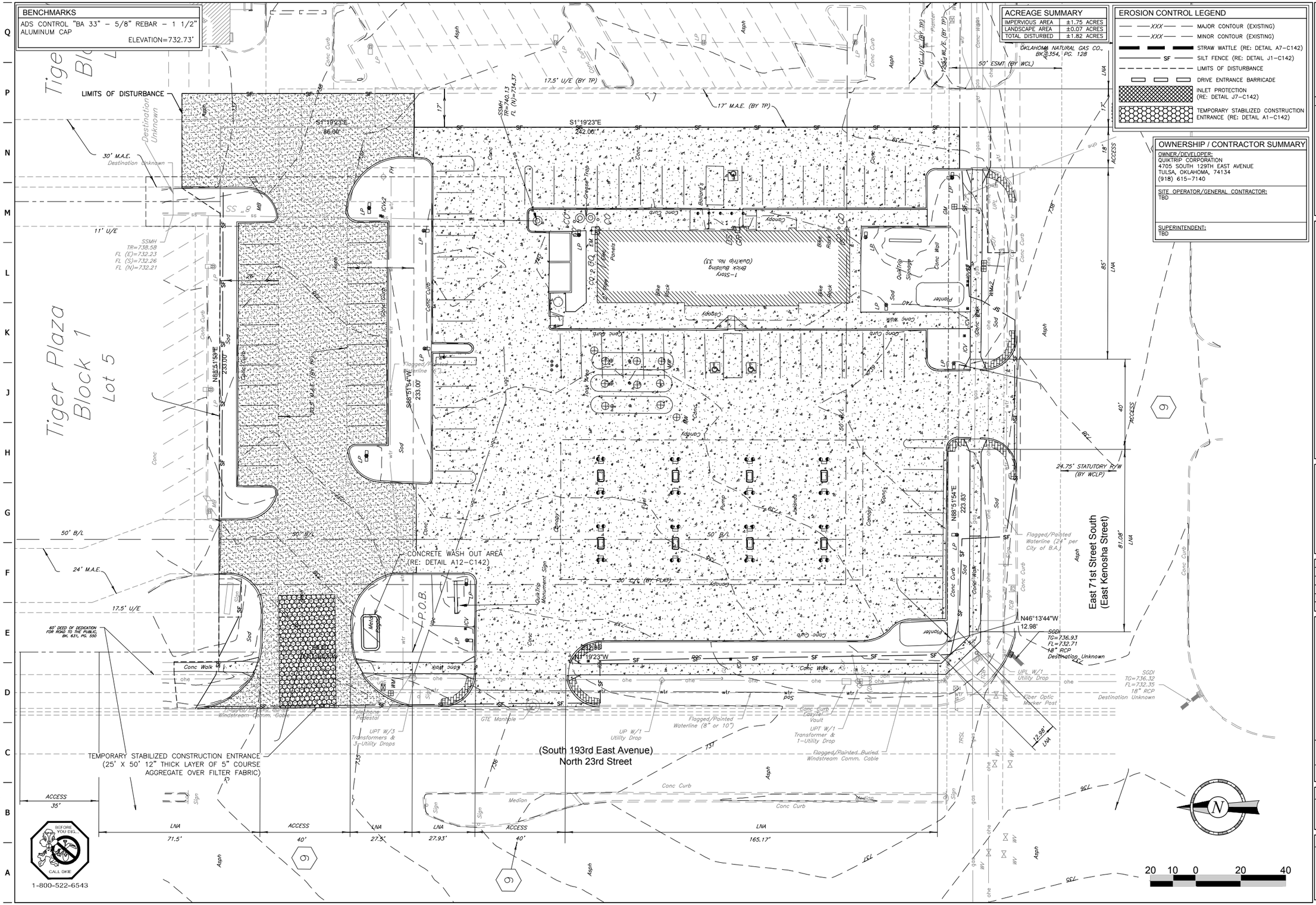

ACREAGE SUMMARY	
IMPERVIOUS AREA	±1.75 ACRES
LANDSCAPE AREA	±0.07 ACRES
TOTAL DISTURBED	±1.82 ACRES

EROSION CONTROL LEGEND

- MAJOR CONTOUR (EXISTING)
- MINOR CONTOUR (EXISTING)
- STRAW WATTLE (RE: DETAIL A7–C142)
- SILT FENCE (RE: DETAIL J1–C142)
- LIMITS OF DISTURBANCE
- DRIVE ENTRANCE BARRICADE
- INLET PROTECTION (RE: DETAIL J7–C142)
- TEMPORARY STABILIZED CONSTRUCTION ENTRANCE (RE: DETAIL A1–C142)

OWNERSHIP / CONTRACTOR SUMMARY

OWNER/DEVELOPER:
QUIKTRIP CORPORATION
4705 SOUTH 129TH EAST AVENUE
TULSA, OKLAHOMA, 74134
(918) 615-7140

SITE OPERATOR/GENERAL CONTRACTOR:
TBD

SUPERINTENDENT:
TBD

LICENSED PROFESSIONAL ENGINEER
Alan Betchan
25330
OKLAHOMA
Mar-2017

PROJECT NO.:

AAB Engineering, LLC
Engineering • Surveying
P.O. Box 2136,
Sand Springs, OK 74063
OK CA#6318 Exp: June 30, 2018
Office: (918) 514-4283
Fax: (918) 514-4288

QuikTrip No. 0033

2400 E. KENOSHA ST.
BROKEN ARROW, OK

© COPYRIGHT QUIKTRIP CORPORATION 2011
ANY UNAUTHORIZED USE, REPRODUCTION, PUBLICATION, DISTRIBUTION, OR SALE IN WHOLE OR IN PART, IS STRICTLY FORBIDDEN.

PROTOTYPE: P-91 (05/02/2017)
DIVISION: BROKEN ARROW
VERSION: 001
DESIGNED BY: AAB
DRAWN BY: KMT
REVIEWED BY:

REV	DATE	DESCRIPTION

CONSTRUCTION SET ISSUE DATE:

SHEET TITLE:
EROSION CONTROL PLAN
PHASE 1

SHEET NUMBER:
C140

FILE LOCATION:P:\1815\06-QT 0033\01-0033 Civil.dwg TAB NAME:Erosion PH 1 USER:Clint SAVED:8/14/2017 12:38 PM PLOTTED:8/15/2017 1:29 PM

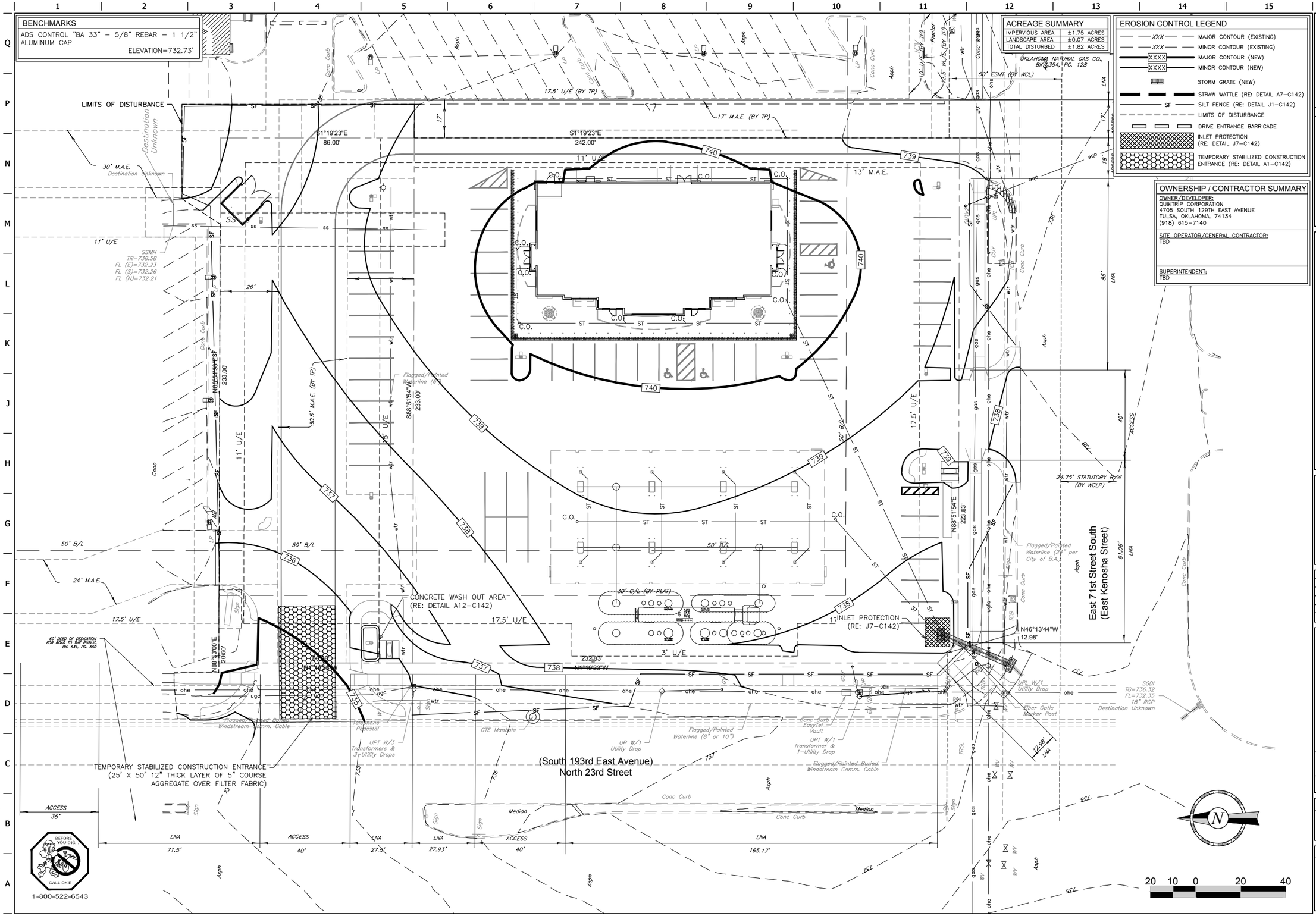

ACREAGE SUMMARY	
IMPERVIOUS AREA	±1.75 ACRES
LANDSCAPE AREA	±0.07 ACRES
TOTAL DISTURBED	±1.82 ACRES

EROSION CONTROL LEGEND

- XXX — MAJOR CONTOUR (EXISTING)
- XXX — MINOR CONTOUR (EXISTING)
- XXXX — MAJOR CONTOUR (NEW)
- XXXX — MINOR CONTOUR (NEW)
- STORM GRATE (NEW)
- STRAW WATTLE (RE: DETAIL A7–C142)
- SF — SILT FENCE (RE: DETAIL J1–C142)
- LIMITS OF DISTURBANCE
- DRIVE ENTRANCE BARRICADE
- INLET PROTECTION (RE: DETAIL J7–C142)
- TEMPORARY STABILIZED CONSTRUCTION ENTRANCE (RE: DETAIL A1–C142)

OWNERSHIP / CONTRACTOR SUMMARY

OWNER/DEVELOPER:
QUIKTRIP CORPORATION
4705 SOUTH 129TH EAST AVENUE
TULSA, OKLAHOMA, 74134
(918) 615–7140

SITE OPERATOR/GENERAL CONTRACTOR:
TBD

SUPERINTENDENT:
TBD

LICENSED PROFESSIONAL ENGINEER
Alan Betchan
25330
OKLAHOMA

PROJECT NO.:

AAB Engineering, LLC
Engineering • Surveying
P.O. Box 2136,
Sand Springs, OK 74063
OK CA#6318 Exp: June 30, 2018
Office: (918) 514-4283
Fax: (918) 514-4288

QuikTrip No. 0033

2400 E. KENOSHA ST.
BROKEN ARROW, OK

© COPYRIGHT QUIKTRIP CORPORATION 2011
ANY UNAUTHORIZED USE, REPRODUCTION, PUBLICATION, DISTRIBUTION, OR SALE IN WHOLE OR IN PART, IS STRICTLY FORBIDDEN.

PROTOTYPE:	P-91 (05/02/2017)
DIVISION:	BROKEN ARROW
VERSION:	001
DESIGNED BY:	AAB
DRAWN BY:	KMT
REVIEWED BY:	

REV	DATE	DESCRIPTION

CONSTRUCTION SET ISSUE DATE:

SHEET TITLE:
EROSION CONTROL PLAN
PHASE 2

SHEET NUMBER:
C141

FILE LOCATION:P:\1815\06-QT 0033\01-0033 Civil.dwg TAB NAME:Erosion PH 2 USER:Clint SAVED:8/14/2017 12:38 PM PLOTTED:8/15/2017 1:29 PM

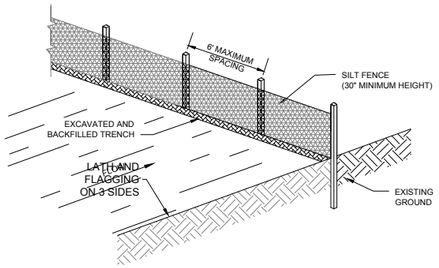

ISOMETRIC VIEW

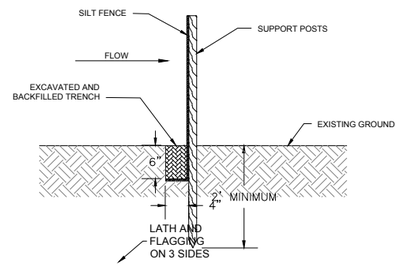

TYPICAL SECTION

- WOODEN OR STEEL POSTS SHALL BE INSTALLED WITH A MINIMUM SPACING OF 6 FEET.
- SILT FENCE MUST BE EMBEDDED AS SHOWN TO PREVENT SEDIMENT TRANSPORT.
- SILT FENCE SHOULD BE SECURED TO EACH POST USING TIES OR STAPLES..
- SILT FENCE SHALL BE INSPECTED AFTER EVERY RAIN EVENT. SEDIMENT SHOULD BE REMOVED IF THE DEPTH EXCEEDS 6 INCHES. DISPOSE OF SEDIMENT ONSITE IN A MANOR THAT WILL MINIMIZE FURTHER EROSION.
- ANY DAMAGE TO SILT FENCE SHALL BE PROMPTLY REPAIRED AND ANY BYPASSED SEDIMENT SHALL BE COLLECTED AS POSSIBLE.
- SILT FENCE SHALL BE REMOVED AS SOON AS PRACTICAL TO LIMIT ITS IMPEDANCE TO STORMWATER FLOWS.

J1 SILT FENCE DETAIL

NTS

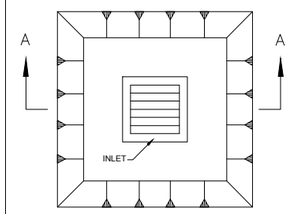

PLAN VIEW

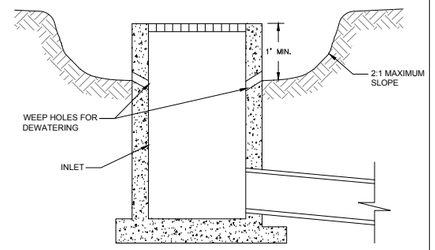

TYPICAL SECTION A-A

- INLET SEDIMENT TRAPS SHALL BE DUG TO A MINIMUM DEPTH OF 1' AT ALL INLETS.
- INLET SEDIMENT TRAPS SHALL BE INSPECTED AFTER EVERY RAIN EVENT. SEDIMENT SHOULD BE REMOVED IF THE DEPTH EXCEEDS 6 INCHES. DISPOSE OF SEDIMENT ONSITE IN A MANOR THAT WILL MINIMIZE FURTHER EROSION.
- WHERE CURBS HAVE BEEN INSTALLED CONSTRUCT A SANDBAG DAM TO FORCE WATER OVER THE CURB TO THE INLET SEDIMENT TRAP.
- INLET SEDIMENT TRAPS SHALL BE REMOVED AS SOON AS PRACTICAL TO LIMIT THEIR IMPEDANCE TO STORMWATER FLOWS.
- WEEP HOLES SHALL BE GROUTED WHEN THE INLET SEDIMENT TRAP IS REMOVED.

J7 INLET SEDIMENT TRAP DETAIL

NTS

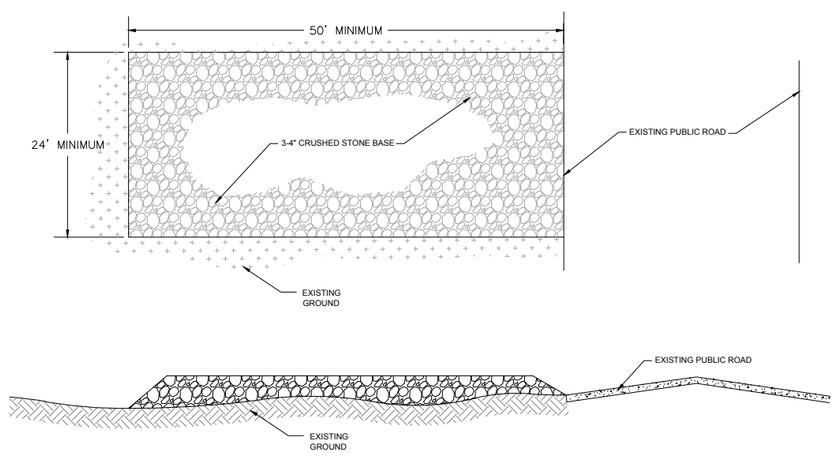

- CRUSHED STONE SHALL BE INSTALLED TO A MINIMUM DEPTH OF 8 INCHES.
- WIDTH OF STABILIZED CONSTRUCTION ENTRANCE SHALL MATCH THE WIDTH OF THE PROPOSED STREET OR ENTRANCE BUT NOT BE LESS THAN 24 FEET.
- THE LENGTH OF THE STABILIZED CONSTRUCTION ENTRANCE SHALL BE AS LONG AS NECESSARY TO PREVENT SEDIMENT OFF TRACKING BUT NOT LESS THAN 50 FEET.
- THE CONTRACTOR SHALL INSPECT AND MAINTAIN THE ENTRANCE FREQUENTLY. MAINTENANCE CAN INCLUDE REGRADING OF THE SURFACE COARSE OR ADDITION OF AGGREGATE.
- ANY SEDIMENT OFF TRACKED TO THE PUBLIC STREETS SHALL BE THE RESPONSIBILITY OF THE CONTRACTOR. THE CONTRACTOR SHALL PROMPTLY REMOVE ANY OFF TRACKED SEDIMENT AND MAINTAIN/EXPAND THE ENTRANCE TO PREVENT FURTHER OFF TRACKING.

A1 STABILIZED CONSTRUCTION ENTRANCE DETAIL

NTS

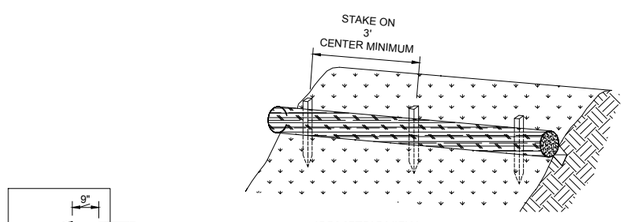

ISOMETRIC VIEW

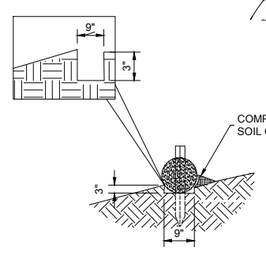

TYPICAL SECTION

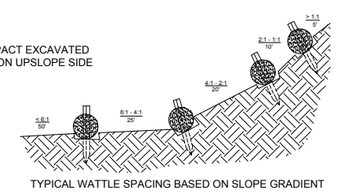

TYPICAL WATTLE SPACING BASED ON SLOPE GRADIENT

A7 STRAW WATTLE

NTS

TEMPORARY EROSION CONTROL SEEDING

TEMPORARY EROSION CONTROL SHOULD BE IMPLEMENTED ONCE BULK EARTHWORK OPERATIONS ARE COMPLETED TO MINIMIZE EROSION POTENTIAL BEFORE PERMANENT COVER IS ESTABLISHED. TEMPORARY SEEDING MEASURES ARE GENERALLY NECESSARY WHEN SOILS WILL BE DISTURBED IN EXCESS OF 6 MONTHS PRIOR TO PERMANENT SEEDING. DURING PERIODS OF HIGH PRECIPITATION OR IN HIGHLY EROSIVE SOILS THIS TIMEFRAME MAY BE SHORTER.

1. THE CONTRACTOR SHALL ENSURE ALL STRUCTURAL EROSION CONTROL MEASURES, INCLUDING STRAW WATTLES, CHECK DAMS, SILT FENCE, AND INLET SEDIMENT TRAPS, HAVE BEEN IMPLEMENTED PRIOR TO TEMPORARY SEEDING.
2. ALL SEED SHALL BE UNIFORMLY DRILLED OR HYDROSEEDED.
3. ALL SEEDING IMPLEMENTS SHOULD TRAVEL PATHS PERPENDICULAR TO THE SLOPES TO LIMIT EROSION.
4. IF THE SURFACE OF THE SOIL IS NOT LOOSENED FROM RECENT GRADING OPERATIONS IT SHALL BE DISCED PRIOR TO SEEDING.
5. AN EVENLY BALANCED FERTILIZER, SUCH AS 10-10-10 OR 13-13-13, SHALL BE APPLIED AT A RATE 450 LBS. PER ACRE (10 LBS PER 1000 SQ. FT.) PRIOR TO SEEDING.
6. SHOULD COVER NOT DEVELOP THE CONTRACTOR SHALL RESEED AS NECESSARY TO ESTABLISH SUFFICIENT GROUND COVER.
7. THE CONTRACTOR SHALL BE RESPONSIBLE FOR WATERING UNTIL 2 INCHES OF GROWTH HAS BEEN ACHIEVED AND AS NECESSARY TO MAINTAIN TEMPORARY COVER.
8. ACCEPTABLE TEMPORARY SEEDING OPTIONS ARE:

PERMANENT EROSION CONTROL SEEDING

PERMANENT EROSION CONTROL SEEDING SHOULD BE COMPLETED AS SOON AS PRACTICAL TO MINIMIZE EROSION. FOR BEST RESULTS A BLEND OF SEED SHOULD BE USED TO DEVELOP A GROUND COVER BEST ADAPTED TO THE VARIED CLIMATE CONDITIONS FOUND IN OKLAHOMA.

1. ALL SEED SHALL BE UNIFORMLY DRILLED OR HYDROSEEDED.
2. ALL SEEDING IMPLEMENTS SHOULD TRAVEL PATHS PERPENDICULAR TO THE SLOPES TO LIMIT EROSION.
3. AN EVENLY BALANCED FERTILIZER, SUCH AS 10-10-10 OR 13-13-13, SHALL BE APPLIED AT A RATE 450 LBS. PER ACRE (10 LBS PER 1000 SQ. FT.) PRIOR TO SEEDING. FERTILIZER SHOULD BE DISCED EVENLY INTO THE SOIL.
4. IF THE SURFACE OF THE SOIL IS NOT LOOSENED FROM RECENT GRADING OPERATIONS IT SHALL BE DISCED PRIOR TO SEEDING.
5. SHOULD COVER NOT DEVELOP THE CONTRACTOR SHALL RESEED AS NECESSARY TO ESTABLISH ADEQUATE GROUND COVER.
6. THE CONTRACTOR SHALL BE RESPONSIBLE FOR WATERING UNTIL 2 INCHES OF GROWTH HAS BEEN ACHIEVED.
7. ACCEPTABLE PERMANENT SEEDING OPTIONS ARE:

SEED TYPE	RATE PER ACRE	RATE PER 1000 SQ. FT.	PLANTING DATE
BERMUDAGRASS	**80 LBS.**	2.0 LBS.	APR.-JULY
FESCUE	**200 LBS.**	5.0 LBS.	MAR.-MAY SEPT.-NOV.
BUFFALOGRASS	**80 LBS.**	2.0 LBS.	APR.-JUNE
WEEPING LOVEGRASS	**40 LBS.**	1.0 LB.	APR.-JUNE

BEFORE YOU DIG... CALL OKIE

1-800-522-6543

BENCHMARKS
ADS CONTROL "BA 33" – 5/8" REBAR – 1 1/2" ALUMINUM CAP ELEVATION=732.73'

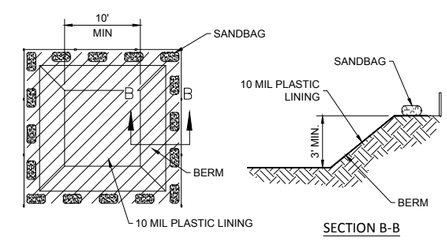

PLAN VIEW

SECTION B-B

- ACTUAL LAYOUT TO BE DETERMINED IN FIELD
- A CONCRETE WASHOUT SIGN SHALL BE INSTALLED WITHIN 30' OF THE TEMPORARY CONCRETE WASHOUT FACILITY
- MATERIALS USED TO CONSTRUCT TEMPORARY WASHOUT FACILITIES SHALL BE REMOVED FROM SITE OF THE WORK AND DISPOSED OF OR RECYCLED
- HOLES, DEPRESSIONS OR OTHER GROUND DISTURBANCE CAUSE BY THE REMOVAL OF THE TEMPORARY CONCRETE WASHOUT SHALL BE BACKFILLED ,REPAIRED. AND SATBILIZED TO PREVENT EROSION

A12 CONCRETE WASHOUT DETAIL

NTS

LICENSED PROFESSIONAL ENGINEER Alan Betchan 25330 OKLAHOMA

PROJECT NO.:

AAB Engineering, LLC
Engineering • Surveying
P.O. Box 2136,
Sand Springs, OK 74063
OK CA#6318 Exp: June 30, 2018
Office: (918) 514-4283
Fax: (918) 514-4288

QuikTrip No. 0033
2400 E. KENOSHA ST.
BROKEN ARROW, OK

© COPYRIGHT QUIKTRIP CORPORATION 2011
ANY UNAUTHORIZED USE, REPRODUCTION, PUBLICATION, DISTRIBUTION, OR SALE IN WHOLE OR IN PART, IS STRICTLY FORBIDDEN.

PROTOTYPE: P-91 (05/02/2017)
DIVISION: BROKEN ARROW
VERSION: 001
DESIGNED BY: AAB
DRAWN BY: KMT
REVIEWED BY:

REV	DATE	DESCRIPTION

CONSTRUCTION SET ISSUE DATE:

SHEET TITLE: EROSION CONTROL DETAILS

SHEET NUMBER: C142

FILE LOCATION:P:\1815\06-QT 0033\01-0033 Civil.dwg TAB NAME:Erosion Control Details USER:Clint SAVED:8/14/2017 12:38 PM PLOTTED:8/15/2017 1:29 PM

BENCHMARKS

ADS CONTROL "BA 33" – 5/8" REBAR – 1 1/2" ALUMINUM CAP
ELEVATION=732.73'

UTILITY GENERAL NOTES

UTILITY INSTALLATION CONSIDERATIONS

PRIOR TO THE CONSTRUCTION OF, OR CONNECTION TO ANY STORM DRAIN, SANITARY SEWER, OR ANY OTHER ELEVATION SENSITIVE UTILITY, THE CONTRACTOR SHALL EXCAVATE, VERIFY AND CALCULATE ALL POINTS OF CONNECTIONS AND ALL UTILITY CROSSINGS. THE CONTRACTOR SHALL INFORM THE ENGINEER AND THE OWNER OF ANY CONFLICT OR REQUIRED DEVIATIONS FROM THE PLAN. THE ENGINEER AND OWNER WILL BE HELD HARMLESS IN THE EVENT THE ENGINEER AND OWNER ARE NOT NOTIFIED OF A DESIGN CONFLICT.

AS POSSIBLE, ALL PROPOSED UTILITIES SHALL BE ROUTED THROUGH PERVIOUS AREAS – SPECIFICALLY AVOIDING ON-SITE PAVED AREAS DESIGNATED FOR PARKING, ACCESS, AND VEHICULAR TRAFFIC FLOW.

REFER TO THIS SHEET FOR LOCATION, AND SHEETS C530 THRU C531 FOR TRENCHING, BACKFILL, AND PLACEMENT DETAILS.

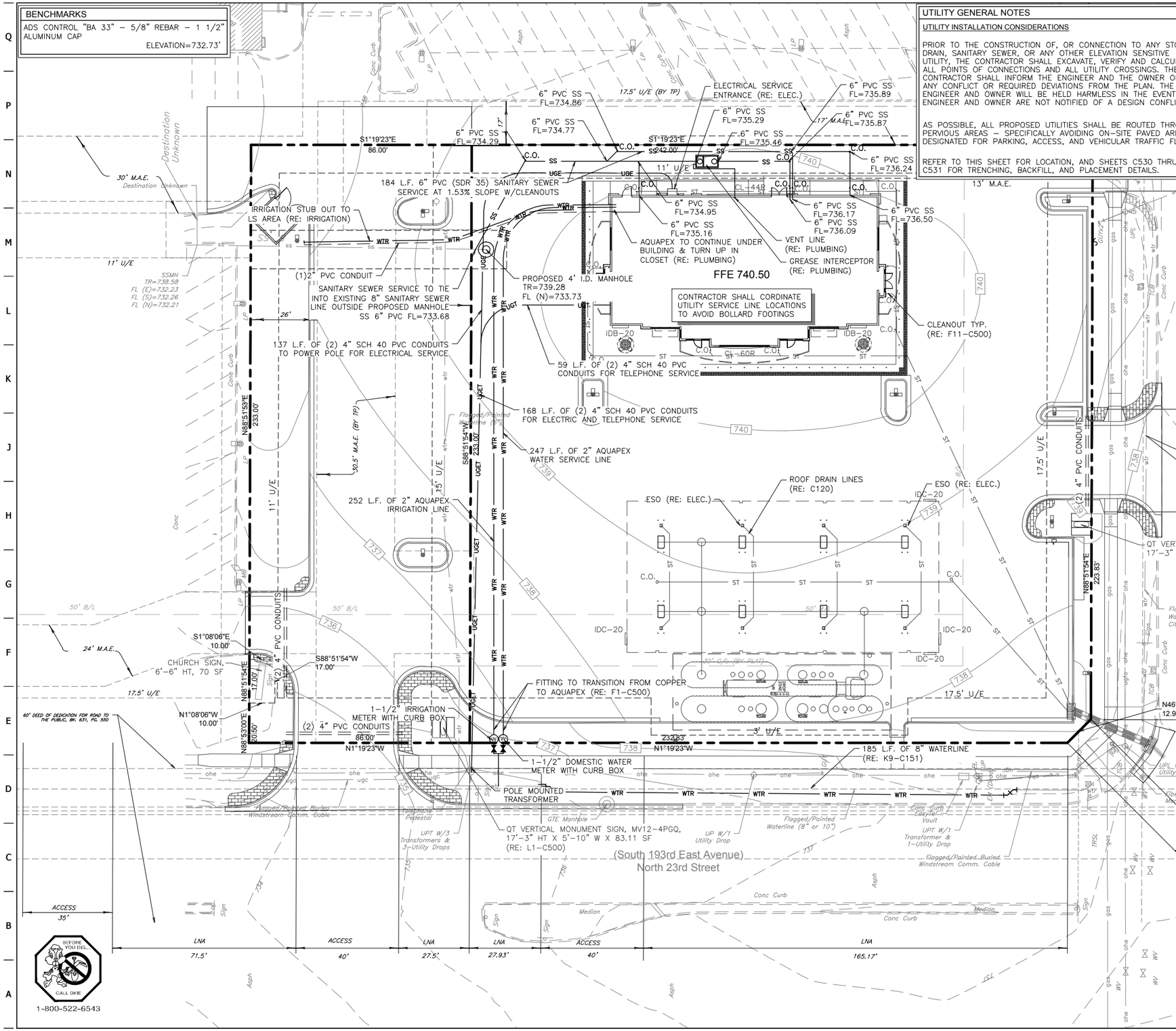

EXISTING LEGEND

- UNDERGROUND CABLE
- OVERHEAD ELECTRIC
- GAS LINE (PLUS SIZE/TYPE ON PLANS)
- SANITARY SEWER LINE (PLUS SIZE/TYPE ON PLANS)
- STORM SEWER LINE (≥12") (PLUS SIZE/TYPE ON PLANS)
- WATER LINE (PLUS SIZE/TYPE ON PLANS)
- UTILITY PEDESTAL/RISER–PLUS TYPE OF UTILITY
- UTILITY POLE–PLUS TYPE OF UTILITY
- UTILITY POLE W/LIGHT
- UTILITY POLE W/TRANSFORMER
- UTILITY MANHOLE (PLUS TYPE/Ę'S)
- UTILITY METER (PLUS TYPE)
- UTILITY VALVE (PLUS TYPE)
- UTILITY CLEAN OUT (PLUS TYPE/SIZE)
- GUY WIRE
- LIGHT POLE (PLUS # HEADS/ DIRECTION SHOWN GRAPHICALLY)
- FIRE HYDRANT
- SINGLE POST SIGN (PLUS TYPE/VERBIAGE)
- TRAFFIC SIGNAL W/MAST ARM
- TRAFFIC SIGNAL
- TRAFFIC CONTROL BOX
- MAIL BOX
- MONITOR WELL
- MPD (MULTIPLE PRODUCT DISPENSER)
- BOLLARD
- PROPERTY R/W LINE (QT NET)
- SECTION LINE
- CURB LINE
- EDGE OF ASPHALT
- EDGE OF CONCRETE
- WALL
- EXISTING STRUCTURE (PLUS MATERIAL, SF, # STORIES)

UTILITY LEGEND (NEW)

- WTR — WATER LINE
- SS — SANITARY SEWER LINE
- UGET — UNDERGROUND ELECTRIC LINE
- UGT — UNDERGROUND TELEPHONE LINE
- ST — STORM PIPE (< 10")
- STORM PIPE (> 12")
- XXX — MAJOR CONTOUR
- XXX — MINOR CONTOUR
- CONCRETE CURB AND GUTTER
- LIGHT POLE – 6' MIN. CLEAR FROM F/C (TRAVEL CENTER PARKING – 15' MIN. CLEAR)

LICENSED PROFESSIONAL ENGINEER Alan Betchan 25330 OKLAHOMA

PROJECT NO.:

AAB Engineering, LLC
Engineering • Surveying
P.O. Box 2136,
Sand Springs, OK 74063
OK CA#6318 Exp: June 30, 2018
Office: (918) 514-4283
Fax: (918) 514-4288

QuikTrip No. 0033

2400 E. KENOSHA ST.
BROKEN ARROW, OK

© COPYRIGHT QUIKTRIP CORPORATION 2011 ANY UNAUTHORIZED USE, REPRODUCTION, PUBLICATION, DISTRIBUTION, OR SALE IN WHOLE OR IN PART, IS STRICTLY FORBIDDEN.

PROTOTYPE: P-91 (05/02/2017)
DIVISION: BROKEN ARROW
VERSION: 001
DESIGNED BY: AAB
DRAWN BY: KMT
REVIEWED BY:

REV	DATE	DESCRIPTION

CONSTRUCTION SET ISSUE DATE:

SHEET TITLE:
UTILITY PLAN

SHEET NUMBER:
C150

FILE LOCATION:P:\1815\06-QT 0033\01-0033 Civil.dwg TAB NAME:Utility USER:Clint SAVED:8/14/2017 12:38 PM PLOTTED:8/15/2017 1:29 PM

BENCHMARKS

ADS CONTROL "BA 33" – 5/8" REBAR – 1 1/2" ALUMINUM CAP
ELEVATION=732.73'

WATERLINE NOTES

1. ALL WATER DISTRIBUTION SYSTEMS SHALL BE CONSTRUCTED IN ACCORDANCE WITH THE CURRENT CITY STANDARDS AND CONSTRUCTION SPECIFICATIONS.
2. ALL WATER DISTRIBUTION SYSTEM CONSTRUCTION SHALL BE INSPECTED BY THE CITY UTILITY INSPECTORS.
3. DIG THROUGH LOCATOR TAPE SHALL BE BURIED 2 FEET ABOVE THE LINE.
4. WHEN C-900 PVC IS USED, A NO. 8 BARE COPPER WIRE SHALL BE TAPED TO THE TOP SURFACE OF THE PIPE AND CONNECTED TO EACH FIRE HYDRANT IMMEDIATELY ABOVE GROUND LEVEL.
5. ALL IRON PIPE AND FITTINGS SHALL BE POLYWRAPPED.
6. ALL LINES IN CONDUIT AND AT DRAINAGE FEATURE CROSSINGS SHALL BE CONSTRUCTED WITH RESTRAINED JOINTS.
7. ALL FITTINGS SHALL HAVE RESTRAINED JOINTS AND THRUST BLOCKS.
8. ALL MAIN LINES SHALL HAVE A MINIMUM OF 42 INCHES (3.5 FEET) AND A MAXIMUM OF EIGHT (8) FEET OF COVER.
9. SERVICE LINES SHALL BE TAPPED TO MAIN LINES USING SOLID BRASS SADDLES. WATER SERVICE WILL BE INSTALLED BY A WATER SERVICE INSTALLATION CONTRACTOR/PLUMBER FROM THE CITY'S APPROVED LIST.
10. ALL EXISTING VALVES TO BE OPERATED BY THE CITY AT CONTRACTOR'S EXPENSE.
11. FIRE HYDRANTS:
    - 11.a. FIRE HYDRANTS SHALL BE MEULLER, KENNEDY, AMERICAN DARLING, OR AVK ONLY. BARREL SIZE IS TO BE 5 1/4" WITH 4 1/2" AND 2 1/2" NST HOSE COUPLING, AND STATED NOTE SHALL REFLECT THIS CONDITION.
    - 11.b. EACH HYDRANT SHALL BE SET WITH THE STREAMER NOZZLE FACING THE STREET AND WITH A MINIMUM CLEARANCE OF EIGHTEEN (18) INCHES ABOVE THE FINISHED GRADE.
12. ALL SALVAGED FITTINGS SHALL, AT THE CITY'S DISCRETION, BE RETURNED TO THE CITY'S YARD AS DIRECTED BY THE INSPECTOR.
13. CONTRACTOR SHALL NOTIFY THE CITY 48 HOURS PRIOR TO TESTING AND CHLORINATION.
14. ALL FITTINGS ARE FURNISHED AND INSTALLED BY THE CONTRACTOR.
15. ALL TAPS, TAPPING SLEEVES AND VALVES WILL BE PROVIDED BY THE CITY OF BROKEN ARROW AT THE CONTRACTOR'S EXPENSE.

UTILITY LEGEND (NEW)

- WTR — WATER LINE
- SS — SANITARY SEWER LINE
- UGET — UNDERGROUND ELECTRIC LINE
- UGT — UNDERGROUND TELEPHONE LINE
- ST — STORM PIPE (< 10")
- STORM PIPE (> 12")
- XXX — MAJOR CONTOUR
- XXX — MINOR CONTOUR
- CONCRETE CURB AND GUTTER
- LIGHT POLE – 6' MIN. CLEAR FROM F/C (TRAVEL CENTER PARKING – 15' MIN. CLEAR)

WATER LINE QUANTITIES

RIGHT-OF-WAY CLEARING AND RESTORING	187	LF
EXCAVATION AND BACKFILL, UNCLASSIFIED	27	CY
8" DUCTILE IRON PIPE	187	LF
CONNECTION TO EXISTING 8" WATER LINE	2	EA
8" 45° BEND	4	EA
8" SOLID SLEEVE	1	EA

UTILITY GENERAL NOTES

UTILITY INSTALLATION CONSIDERATIONS

PRIOR TO THE CONSTRUCTION OF, OR CONNECTION TO ANY STORM DRAIN, SANITARY SEWER, OR ANY OTHER ELEVATION SENSITIVE UTILITY, THE CONTRACTOR SHALL EXCAVATE, VERIFY AND CALCULATE ALL POINTS OF CONNECTIONS AND ALL UTILITY CROSSINGS. THE CONTRACTOR SHALL INFORM THE ENGINEER AND THE OWNER OF ANY CONFLICT OR REQUIRED DEVIATIONS FROM THE PLAN. THE ENGINEER AND OWNER WILL BE HELD HARMLESS IN THE EVENT THE ENGINEER AND OWNER ARE NOT NOTIFIED OF A DESIGN CONFLICT.

AS POSSIBLE, ALL PROPOSED UTILITIES SHALL BE ROUTED THROUGH PERVIOUS AREAS – SPECIFICALLY AVOIDING ON-SITE PAVED AREAS DESIGNATED FOR PARKING, ACCESS, AND VEHICULAR TRAFFIC FLOW.

REFER TO THIS SHEET FOR LOCATION, AND SHEETS C530 THRU C531 FOR TRENCHING, BACKFILL, AND PLACEMENT DETAILS.

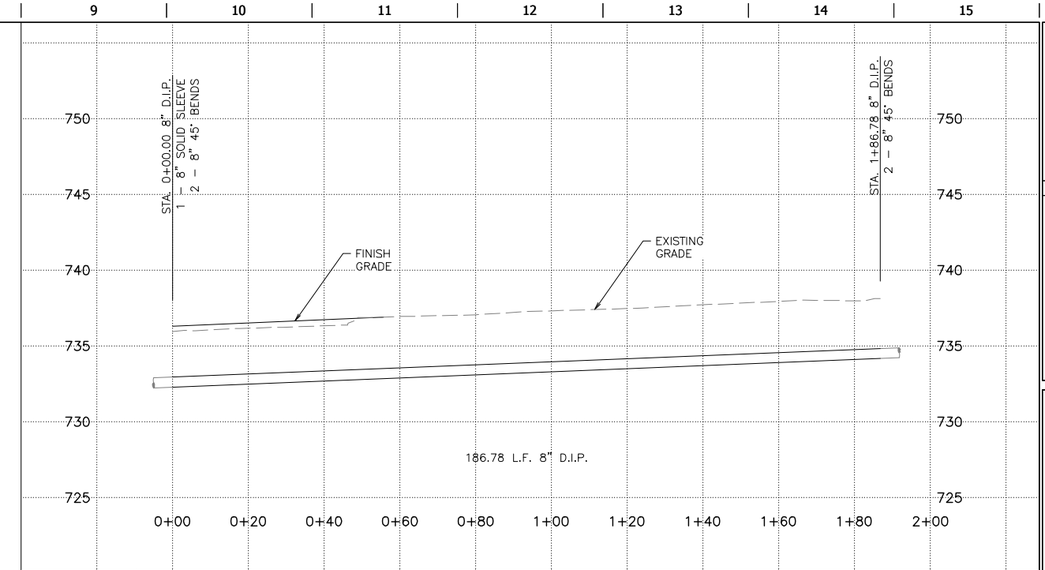

K9 — 8" DUCTILE IRON PIPE PROFILE

H: 1"=20', V: 1"=5'

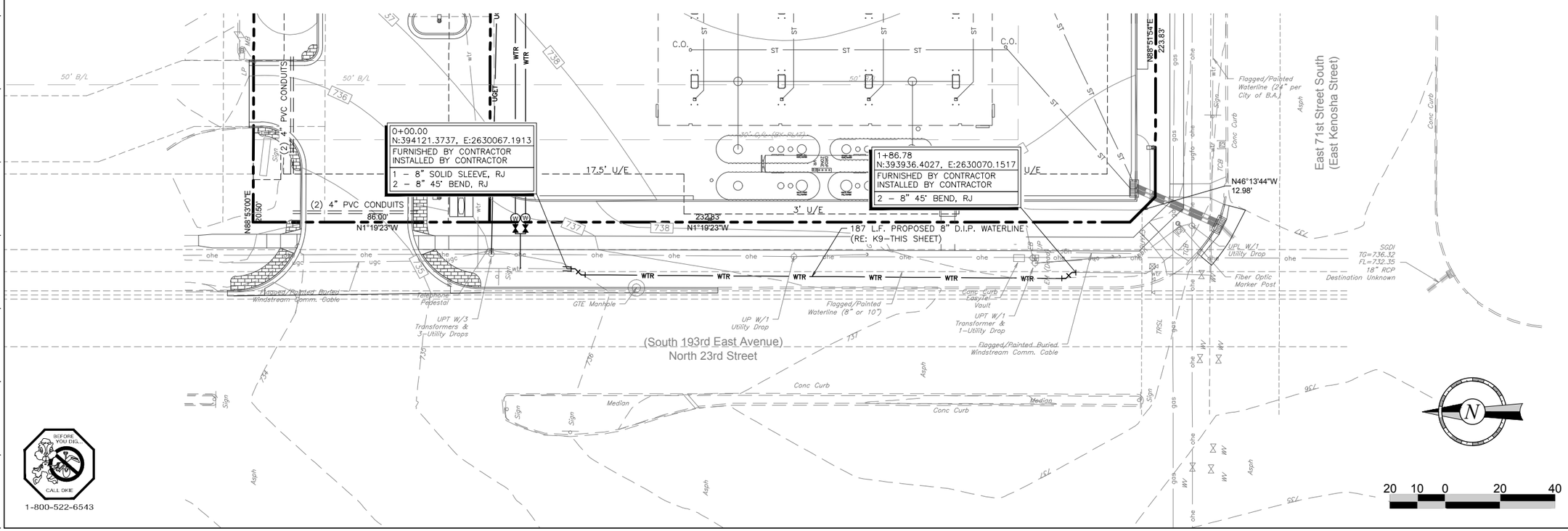

BEFORE YOU DIG... CALL OKIE
1-800-522-6543

LICENSED PROFESSIONAL ENGINEER — Alan Betchan — 25330 — OKLAHOMA — 11-15-2017

PROJECT NO.:

AAB Engineering, LLC
Engineering • Surveying
P.O. Box 2136,
Sand Springs, OK 74063
OK CA#6318 Exp: June 30, 2018
Office: (918) 514-4283
Fax: (918) 514-4288

QuikTrip No. 0033

2400 E. KENOSHA ST.
BROKEN ARROW, OK

© COPYRIGHT QUIKTRIP CORPORATION 2011 ANY UNAUTHORIZED USE, REPRODUCTION, PUBLICATION, DISTRIBUTION, OR SALE IN WHOLE OR IN PART, IS STRICTLY FORBIDDEN.

PROTOTYPE: P-91 (05/02/2017)
DIVISION: BROKEN ARROW
VERSION: 001
DESIGNED BY: AAB
DRAWN BY: KMT
REVIEWED BY:

REV	DATE	DESCRIPTION

CONSTRUCTION SET ISSUE DATE:

SHEET TITLE: WATERLINE PLAN AND PROFILE

SHEET NUMBER: C151

FILE LOCATION:P:\1815\06-QT 0033\01-0033 Civil.dwg TAB NAME:Waterline P&P USER:Clint SAVED:8/14/2017 12:38 PM PLOTTED:8/15/2017 1:29 PM

BENCHMARKS

ADS CONTROL "BA 33" – 5/8" REBAR – 1 1/2" ALUMINUM CAP

ELEVATION=732.73'

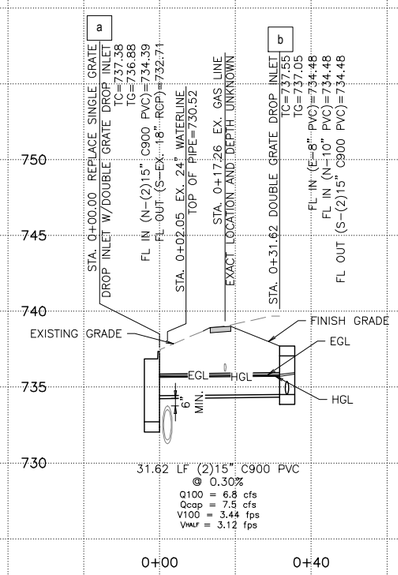

BEFORE YOU DIG... CALL OKIE 1-800-522-6543

AREAS TO BE COMPACTED TO 95% STANDARD PROCTOR DENSITY PRIOR TO UTILITY CONSTRUCTION.

UTILITY LINES LOCATED UNDER PAVEMENT SHALL BE BACKFILED WITH TYPE A AGGREGATE BASE COMPACTED TO 95% STANDARD DENSITY, OR FLOWABLE FILL, AS SHOWN ON PROFILES.

ALL STORM SEWERS SHOWN ARE PRIVATE UNLESS OTHERWISE NOTED.

20 10 0 20 40

LICENSED PROFESSIONAL ENGINEER Alan Betchan 25330 OKLAHOMA

PROJECT NO.:

AAB Engineering, LLC
Engineering • Surveying
P.O. Box 2136,
Sand Springs, OK 74063
OK CA#6318 Exp: June 30, 2018
Office: (918) 514-4283
Fax: (918) 514-4288

QuikTrip No. 0033

2400 E. KENOSHA ST.
BROKEN ARROW, OK

© COPYRIGHT QUIKTRIP CORPORATION 2011
ANY UNAUTHORIZED USE, REPRODUCTION, PUBLICATION, DISTRIBUTION, OR SALE IN WHOLE OR IN PART, IS STRICTLY FORBIDDEN.

PROTOTYPE: P-91 (05/02/2017)
DIVISION: BROKEN ARROW
VERSION: 001
DESIGNED BY: AAB
DRAWN BY: KMT
REVIEWED BY:

REV	DATE	DESCRIPTION

CONSTRUCTION SET ISSUE DATE:

SHEET TITLE:
STORM SEWER PROFILES

SHEET NUMBER:
C300

FILE LOCATION:P:\1815\06-QT 0033\01-0033 Civil.dwg TAB NAME:Storm Profiles USER:Clint SAVED:8/14/2017 12:38 PM PLOTTED:8/15/2017 1:29 PM

1. 4" THICK X 4000 P.S.I. CONCRETE LADDER PAD W/6"X6" 10 GA. W.W.F. PLACED LEVEL, MID-DEPTH (TYPICAL)
2. 4" THICK X 4000 P.S.I. CONCRETE SIGN PAD W/6"X6" 10 GA. W.W.F. PLACED LEVEL, MID-DEPTH (TYPICAL)
3. CAULK CONSTRUCTION JOINT BETWEEN SIGN AND LADDER PADS.
4. FOR QT SIGN PAD PLACEMENT, RE: SITE PLAN FOR SITE SPECIFIC SIGNAGE.

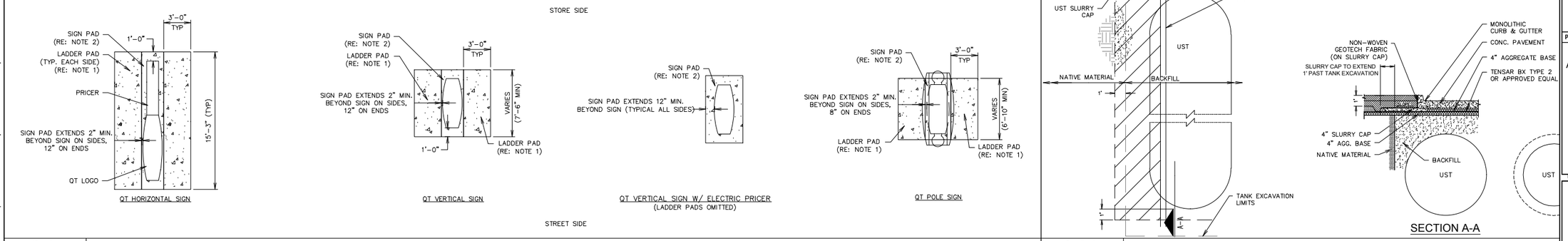

L1 GEN III SIGN PAD DETAIL

NTS | SN: SD015A004

RE: PAVING DETAILS & FUEL INSTALLATION PLANS FOR SPECIFIC ITEMS NOT RELATED TO THE SLURRY CAP INSTALLATION.

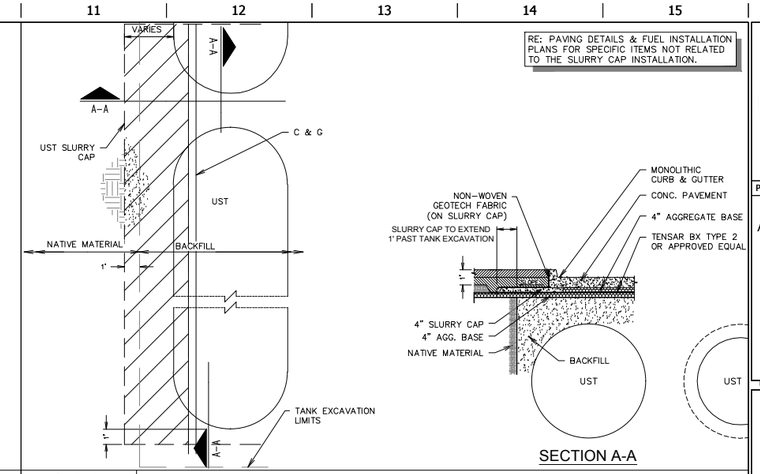

L11 2 X 2 TANK SLURRY CAP DETAIL

NTS | SN: SD030B004

1. ALL PIPE, JOINTS, AND ADAPTORS MUST BE STORED PER THE GUIDELINES LAID OUT IN UPONOR SPECIFICATIONS.
2. PIPE BE STORED IN A FLAT, DRY, WELL VENTILATED LOCATION, NOT EXPOSED TO DIRECT SUNLIGHT. NORMAL CARE IN HANDLING SHALL BE EXERCISED TO AVOID ABUSE OF THE TUBING. THE TUBING AND FITTINGS SHALL NOT BE THROWN OR DROPPED ON THE GROUND, WALKED ON, OR DRAGGED.
3. TUBING CONNECTION: ALL TUBING CONNECTIONS SHALL BE MADE STRICTLY PER THE MANUFACTURERS RECOMMENDATIONS.
4. CONNECTION TO OTHER MATERIALS: CONNECTIONS BETWEEN CROSS-LINKED POLYETHYLENE PLASTIC TUBING AND OTHER PIPING MATERIALS SHALL BE BY USE OF APPROVED ADAPTER FITTINGS. ADAPTER FITTINGS SHALL BE CONNECTED BY NPT THREADS, COPPER TUBING, COPPER FITTING OR PROPRESS FITTINGS. THE ADAPTER FITTINGS SHALL BE INSTALLED IN ACCORDANCE WITH THE MANUFACTURER'S INSTALLATION INSTRUCTIONS.
5. EXPANSION AND CONTRACTION: PROVISION SHALL BE TAKEN FOR THE EXPANSION AND CONTRACTION OF THE CROSSLINKED POLYETHYLENE PLASTIC TUBING INSTALLATION. THE TUBING SHALL NOT BE INSTALLED IN TIGHT STRAIGHT RUNS. FLEXIBILITY IN THE INSTALLATION SHALL BE PROVIDED TO PERMIT EXPANSION AND CONTRACTION.
6. PIPE PROTECTION: CROSS-LINKED POLYETHYLENE PLASTIC TUBING SHALL BE INSTALLED IN A WORKMANLIKE MANNER TO AVOID DAMAGE TO THE TUBING AND SURROUNDING BUILDING SYSTEMS. CROSS-LINKED POLYETHYLENE PLASTIC TUBING SHALL BE PROTECTED TO AVOID ABRASION AND CONTACT WITH THE SURROUNDING BUILDING MATERIAL.
7. PIPING IDENTIFICATION: CROSS-LINKED POLYETHYLENE PLASTIC PIPING SYSTEMS FOR HOT AND COLD WATER DISTRIBUTION SHALL HAVE THE MARKINGS THAT CONFORM TO THE ASTM F876 MARKING REQUIREMENTS AND ALSO INCLUDE: NSF-PW, ES ER 5944 ES ER 5945 ES ER 5421.
8. CONNECTION SCHEDULE:
   PROPEX FITTING # Q 4502020 2" PEX x 2" COPPER FITTING
   PROPEX FITTING # Q 4512020 2" PEX x 2" COPPER PIPE
   PROPEX FITTING # G 4501515 1.5" PEX x 1.5" COPPER FITTING
   PROPEX FITTING # G 4511515 1.5" PEX x 1.5" COPPER PIPE

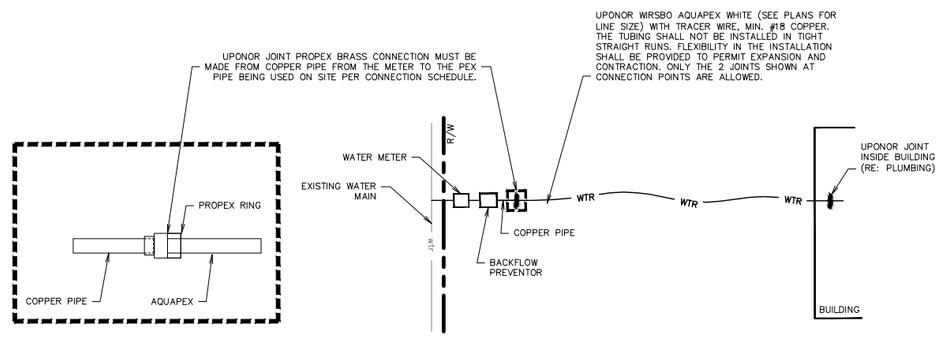

F1 PEX DETAIL - WATER METER & BFP @ STREET

NTS | SN: SD023A001

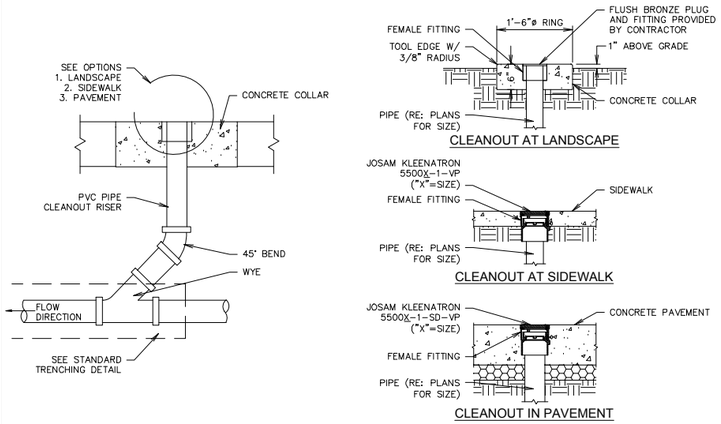

F11 CLEANOUT SECTION DETAIL

NTS | SN: SD016A006

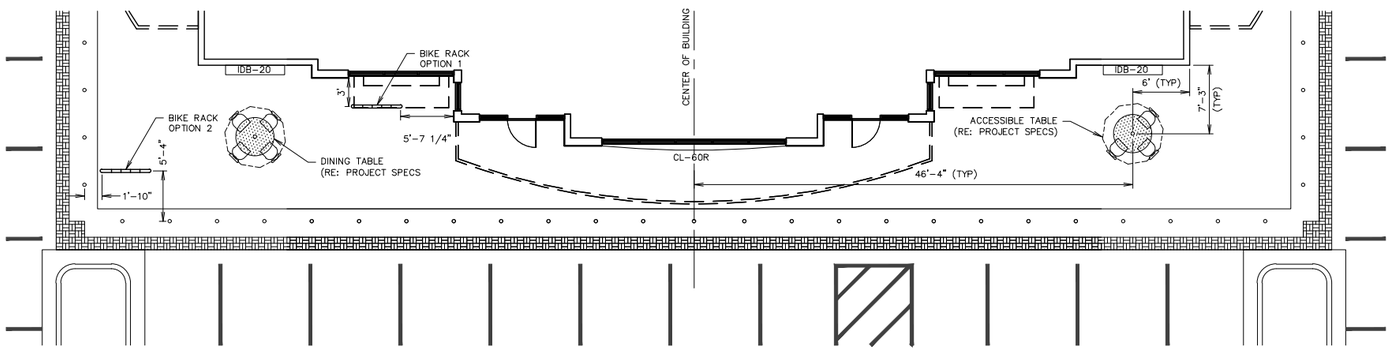

A1 OUTSIDE TABLE PLACEMENT

NTS | SN: SD024A004

1. RE: SITE PLAN FOR LOCATION
2. "FIRE LANE NO PARKING" TO APPEAR 80 FEET O/C (OR AS REQUIRED BY FIRE OFFICIAL).
3. FIRE LANE STRIPES ARE TO BE PAINTED RED. STENCIL LETTERS ARE TO BE PAINTED WITH REFLECTIVE WHITE PAINT.

A11 FIRE LANE DETAIL

NTS | SN:

LICENSED PROFESSIONAL ENGINEER Alan Betchan 25330 OKLAHOMA

PROJECT NO.:

AAB Engineering, LLC
Engineering • Surveying
P.O. Box 2136,
Sand Springs, OK 74063
OK CA#6318 Exp: June 30, 2018
Office: (918) 514-4283
Fax: (918) 514-4288

QuikTrip No. 0033
2400 E. KENOSHA ST.
BROKEN ARROW, OK

© COPYRIGHT QUIKTRIP CORPORATION 2011 ANY UNAUTHORIZED USE, REPRODUCTION, PUBLICATION, DISTRIBUTION, OR SALE IN WHOLE OR IN PART, IS STRICTLY FORBIDDEN.

PROTOTYPE: P-91 (05/02/2017)
DIVISION: BROKEN ARROW
VERSION: 001
DESIGNED BY: AAB
DRAWN BY: KMT
REVIEWED BY:

REV	DATE	DESCRIPTION

CONSTRUCTION SET ISSUE DATE:

SHEET TITLE: MISC. SITE DETAILS

SHEET NUMBER: C500

FILE LOCATION: P:\1815\06-QT 0033\DETAILS MISC. SITE.dwg TAB NAME: SITE DETAIL SHEET 1 USER: Tech12 SAVED: 8/8/2017 3:41 PM PLOTTED: 8/15/2017 1:29 PM

1. RE: SITE PLAN FOR LOCATION OF ADA PARKING SPACES AND ACCESS AISLE IN RELATIONSHIP TO THE DOOR LOCATION. (THIS DETAIL IS FOR STRIPING LAYOUT ONLY)

2. PARKING STRIPES AND THE ADA INTERNATIONAL HANDICAP SYMBOL ARE TO BE PAINTED PER THE MANUFACTURER'S RECOMMENDATIONS. (RE: PROJECT SPECS)

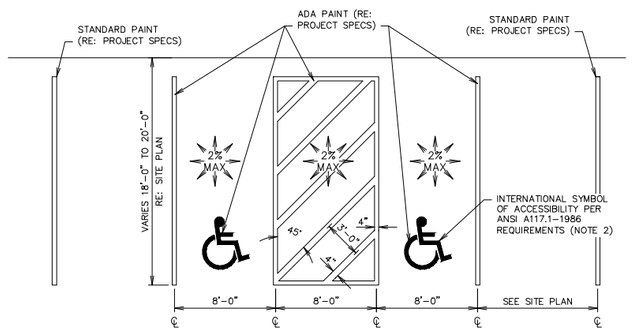

L1 DOUBLE STALL ADA PARKING STRIPING DETAIL

NTS | SN: AD001A008

1. RE: SITE PLAN FOR LOCATION OF ADA PARKING SPACES AND ACCESS AISLE IN RELATIONSHIP TO THE DOOR LOCATION. (THIS DETAIL IS FOR STRIPING LAYOUT ONLY)

2. PARKING STRIPES AND THE ADA INTERNATIONAL HANDICAP SYMBOL ARE TO BE PAINTED PER THE MANUFACTURER'S RECOMMENDATIONS. (RE: PROJECT SPECS)

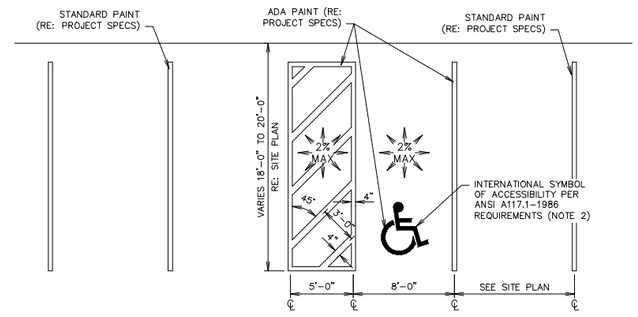

L6 SINGLE STALL ADA PARKING STRIPING DETAIL

NTS | SN: AD002A008

1. RE: SITE PLAN FOR DETERMINING LOCATION. 2. ADA SIGNAGE TO BE FASTENED TO FRAME USING POP RIVETS.

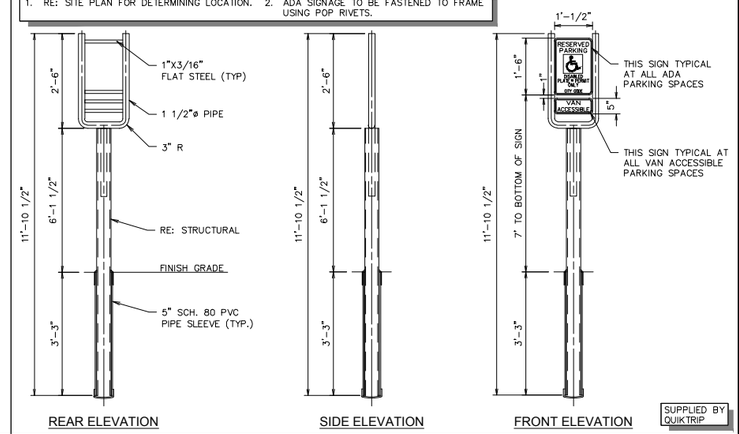

SUPPLIED BY QUIKTRIP

L11 ADA SIGN IN BOLLARD

NTS | SN: AD003C006

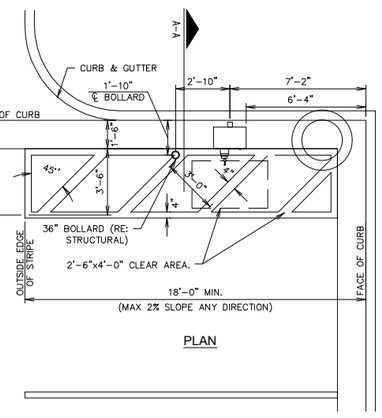

PLAN

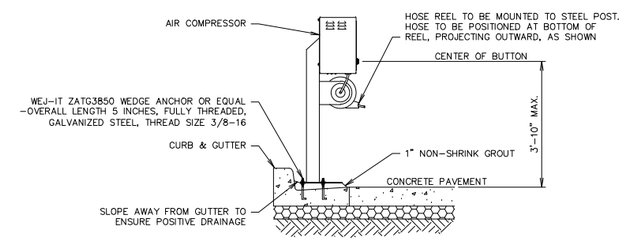

SECTION A-A

COMPRESSOR AND STAND SUPPLIED BY QUIKTRIP

F1 AIR SERVICE INSTALL PLAN (LEFT HAND INSTALL)

NTS | SN: AD004B009

1. REQUIRED FOR ALL PRIVATE PROPERTY INTERIOR LOCATIONS.
2. RE: PROJECT SPECS FOR PRODUCT COLOR & TYPE.
3. PRODUCT SHOULD BE APPLIED PER MANUFACTURER'S SPECIFICATIONS.
4. PREPARATION OF THE SURFACE SHALL CONSIST OF A MINIMUM OF TWO APPLICATIONS OF POWER WASHING.
5. TWO APPLICATIONS OF PRODUCT SHALL BE ROLLED ON.

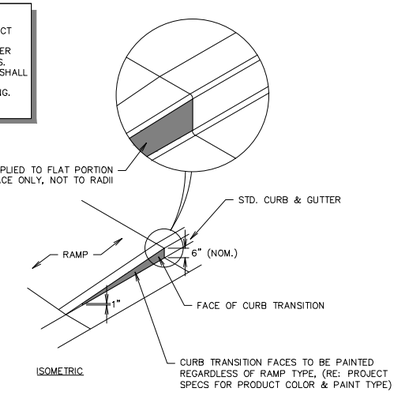

F11 RAMP - CURB TRANSITION PAINTING DETAIL

NTS | SN: AD015A002

RE: SITE PLAN FOR LOCATION OF ADA RAMP

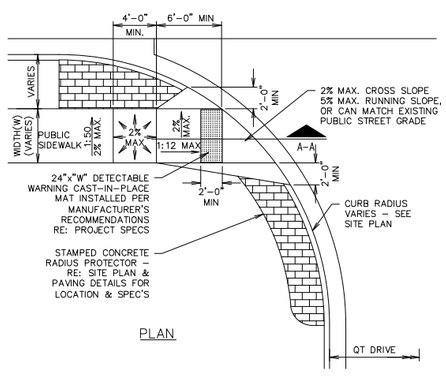

PLAN

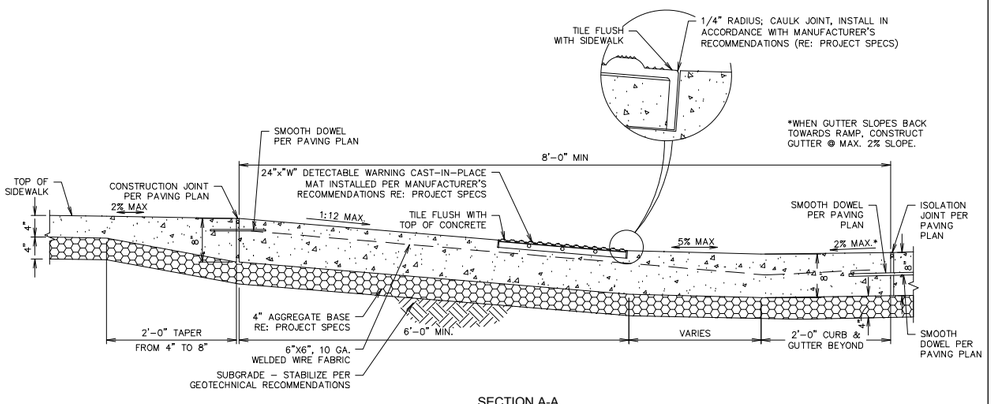

SECTION A-A

A1 ADA ACCESS RAMP AT DRIVE

NTS | SN: AD006A007

NOTES:
1. 6" RAISED SIDEWALK IS REQUIRED WHEN AN OBJECT WHICH PROTRUDES MORE THAN 4" HAS LEADING EDGES MORE THAN 27" AND NOT MORE THAN 80" ABOVE THE WALKING SURFACE.
2. CANE DETECTION THAT DOUBLES AS A UTILITY CABINET BASE SHALL HAVE A LEVEL PAD FOR THE CABINET. THE REMAINING PAD BEYOND THE CABINET SHALL BE SLOPED AWAY AT 2% FOR DRAINAGE.

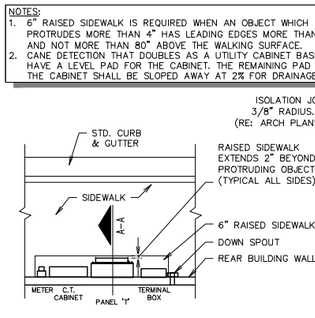

PLAN

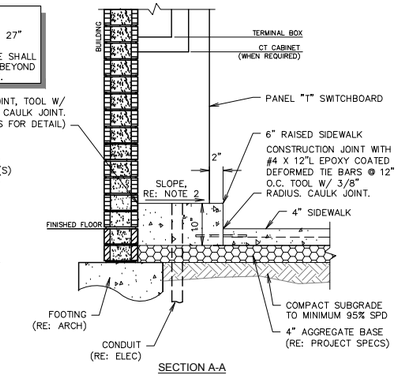

SECTION A-A

A11 CANE DETECTION FOR PROTRUDING OBJECTS

NTS | SN: AD014A003

LICENSED PROFESSIONAL ENGINEER Alan Betchan 25330 OKLAHOMA

PROJECT NO.:

AAB Engineering, LLC
Engineering • Surveying
P.O. Box 2136, Sand Springs, OK 74063
OK CA#6318 Exp: June 30, 2018
Office: (918) 514-4283
Fax: (918) 514-4288

QuikTrip No. 0033

2400 E. KENOSHA ST.
BROKEN ARROW, OK

© COPYRIGHT QUIKTRIP CORPORATION 2011 ANY UNAUTHORIZED USE, REPRODUCTION, PUBLICATION, DISTRIBUTION, OR SALE IN WHOLE OR IN PART, IS STRICTLY FORBIDDEN.

PROTOTYPE: P-91 (05/02/2017)
DIVISION: BROKEN ARROW
VERSION: 001
DESIGNED BY: AAB
DRAWN BY: KMT
REVIEWED BY:

REV	DATE	DESCRIPTION

CONSTRUCTION SET ISSUE DATE:

SHEET TITLE: ADA DETAILS

SHEET NUMBER: C510

FILE LOCATION: P:\1815\06-QT 0033\DETAILS ADA.dwg TAB NAME: ADA Detail Sheet 1 USER: Tech12 SAVED: 8/8/2017 3:42 PM PLOTTED: 8/15/2017 1:29 PM

L1 — NOT USED

NTS | SN:

L6 — NOT USED

NTS | SN:

L11 — NOT USED

NTS | SN:

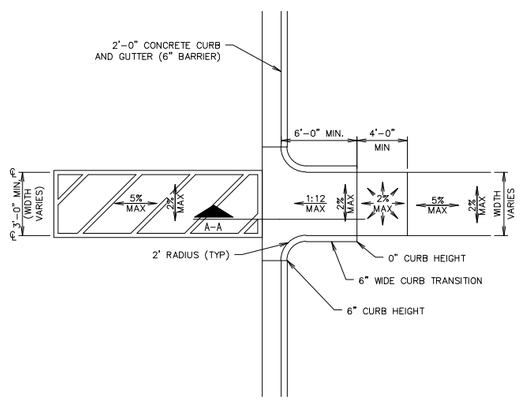

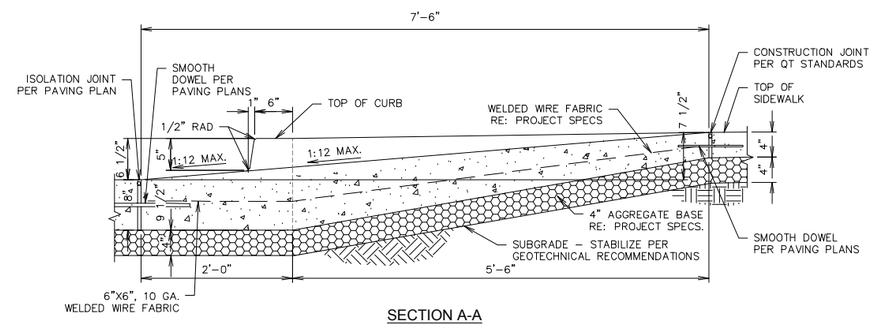

SECTION A-A

1. REQUIRED FOR ALL PRIVATE PROPERTY INTERIOR LOCATIONS.
2. RE: PROJECT SPECS FOR PRODUCT COLOR & TYPE.
3. PRODUCT SHOULD BE APPLIED PER MANUFACTURER'S SPECIFICATIONS.
4. PREPARATION OF THE SURFACE SHALL CONSIST OF A MINIMUM OF TWO APPLICATIONS OF POWER WASHING.
5. TWO APPLICATIONS OF PRODUCT SHALL BE ROLLED ON.

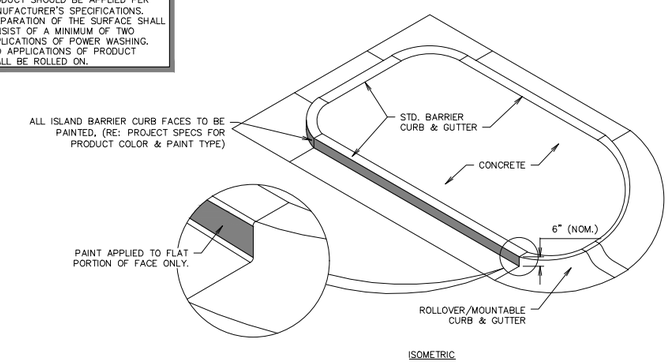

ISOMETRIC

F1 — PARKING LOT CURB RAMP @ ADA CROSSING

NTS | SN: AD012A003

F11 — ISLAND - BARRIER CURB PAINTING DETAIL (NON-LANDSCAPED)

NTS | SN: AD016A001

A1 — NOT USED

NTS | SN:

A6 — NOT USED

NTS | SN:

A11 — NOT USED

NTS | SN:

LICENSED PROFESSIONAL ENGINEER
Alan Betchan
25330
OKLAHOMA

PROJECT NO.:

AAB Engineering, LLC
Engineering • Surveying
P.O. Box 2136,
Sand Springs, OK 74063
OK CA#6318 Exp: June 30, 2018
Office: (918) 514-4283
Fax: (918) 514-4288

QuikTrip No. 0033

2400 E. KENOSHA ST.
BROKEN ARROW, OK

© COPYRIGHT QUIKTRIP CORPORATION 2011
ANY UNAUTHORIZED USE, REPRODUCTION, PUBLICATION, DISTRIBUTION, OR SALE IN WHOLE OR IN PART, IS STRICTLY FORBIDDEN.

PROTOTYPE:	P-91 (05/02/2017)
DIVISION:	BROKEN ARROW
VERSION:	001
DESIGNED BY:	AAB
DRAWN BY:	KMT
REVIEWED BY:	

REV	DATE	DESCRIPTION

CONSTRUCTION SET ISSUE DATE:

SHEET TITLE:
ADA DETAILS

SHEET NUMBER:
C511

FILE LOCATION:P:\1815\08-QT 0033\DETAILS ADA.dwg TAB NAME:ADA Detail Sheet 2 USER:Tech12 SAVED:8/8/2017 3:42 PM PLOTTED:8/15/2017 1:29 PM

RE: GEOTECHNICAL REPORT FOR APPROVED METHOD OF SUBGRADE PREPARATION

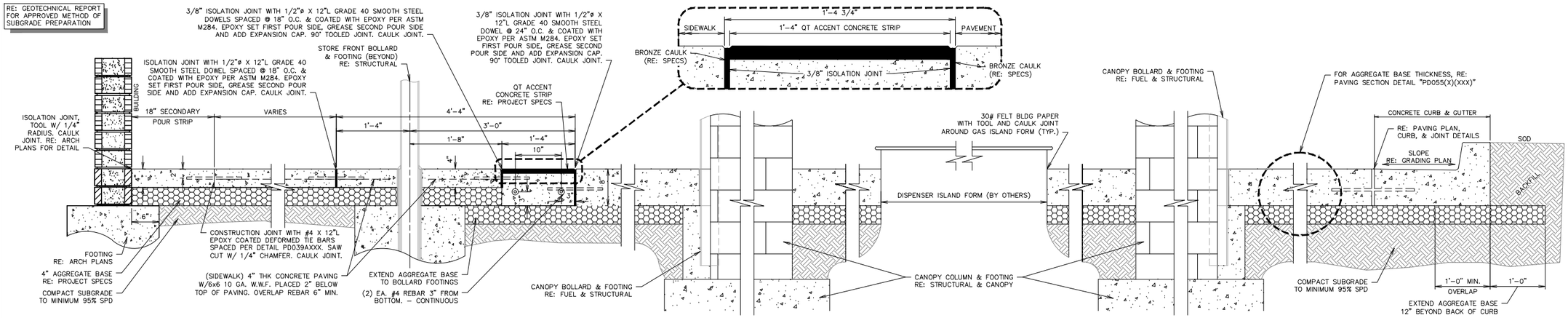

L1 — PAVING SECTION THROUGH SITE W/ STORE FRONT BOLLARDS (GEN III)

NTS | SN: PD001C012

RE: GEOTECHNICAL REPORT FOR APPROVED METHOD OF SUBGRADE PREPARATION

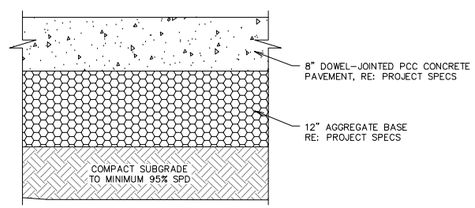

F1 — PAVING SECTION DETAIL (12" AGG.)

NTS | SN: PD055D002

RE: GEOTECHNICAL REPORT FOR APPROVED METHOD OF SUBGRADE PREPARATION

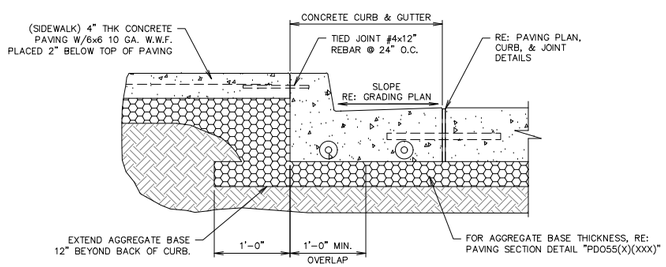

F6 — SIDEWALK SECTION ABUTTING CURB & GUTTER

NTS | SN: PD002A007

1. PANELS WITH THE FOLLOWING CRITERIA SHALL BE REINFORCED (EXCEPT 16.33' PANELS BETWEEN DOUBLE STACK FUEL ISLANDS AND THOSE PANELS PROJECTING OUTWARD FROM THESE): PANELS OF MORE THAN 15' IN LENGTH OR WIDTH, PANELS THAT EXCEED THE MAXIMUM LENGTH TO WIDTH RATIO OF 1.25:1, PANELS THAT ARE IRREGULAR IN SHAPE OR PANELS IN WHICH ANY CORNER'S ACUTE ANGLE IS LESS THAN THE MINIMUM 80 DEGREES.
2. RE: PAVING PLAN TO LOCATE REINFORCED PANELS.
3. RE: PAVING PLAN FOR BROOM FINISH DIRECTION.
4. MAINTAIN 2" CLEAR COVER AT ENDS OF BARS.
5. TIE ALL BARS TOGETHER WHERE THEY CROSS.
5. REBAR SHALL BE 2" CLEAR MIN. FROM ANY DOWEL BARS.
6. USE PROPER CHAIRS TO MAINTAIN 2" CLEAR FROM TOP OF PAVEMENT.
7. UP TO 4 STAKES PER PANEL IS ACCEPTABLE TO PREVENT MOVEMENT OF REBAR DURING POUR. STAKES SHALL BE 24" OR MORE FROM THE EDGE OF PANEL.

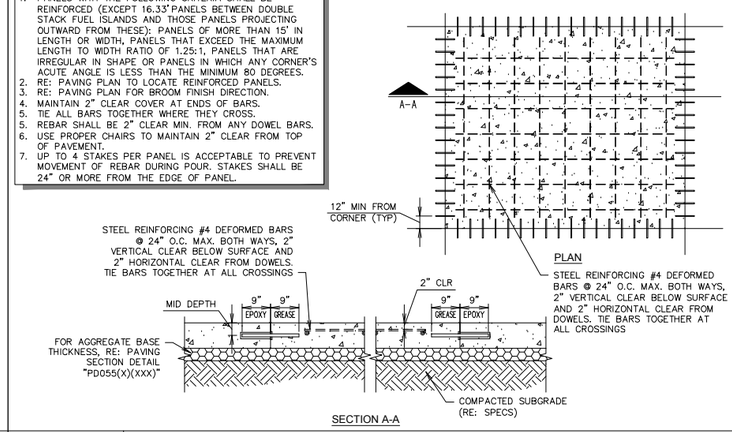

F11 — PAVEMENT REINFORCING DETAIL

NTS | SN: PD003A007

A1 — NOT USED

NTS | SN:

1. NO DOWELS ALLOWED WITHIN 12" OF A CROSS JOINT.

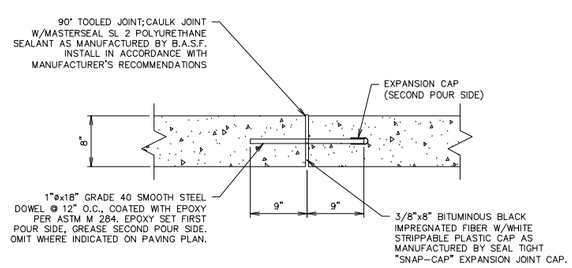

A6 — PAVING JOINT - ISOLATION

NTS | SN: PD005A006

1. NO DOWELS ALLOWED WITHIN 12" OF A CROSS JOINT.

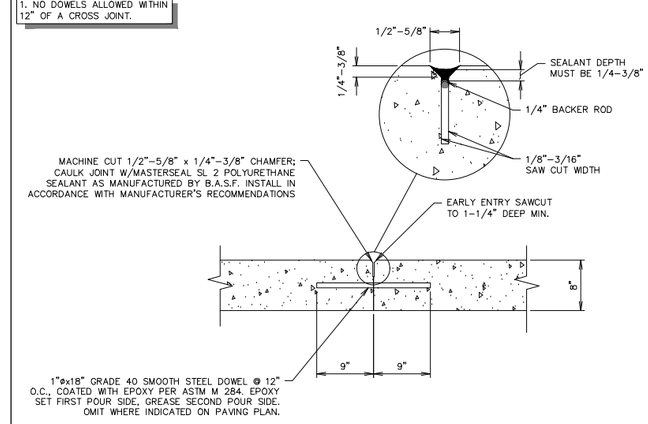

A11 — PAVING JOINT - CONSTRUCTION

NTS | SN: PD006A006

LICENSED PROFESSIONAL ENGINEER — Alan Betchan 25330 — OKLAHOMA

PROJECT NO.:

AAB Engineering, LLC
Engineering • Surveying
P.O. Box 2136, Sand Springs, OK 74063
OK CA#6318 Exp: June 30, 2018
Office: (918) 514-4283
Fax: (918) 514-4288

QuikTrip No. 0033

2400 E. KENOSHA ST.
BROKEN ARROW, OK

© COPYRIGHT QUIKTRIP CORPORATION 2011 ANY UNAUTHORIZED USE, REPRODUCTION, PUBLICATION, DISTRIBUTION, OR SALE IN WHOLE OR IN PART, IS STRICTLY FORBIDDEN.

PROTOTYPE: P-91 (05/02/2017)
DIVISION: BROKEN ARROW
VERSION: 001
DESIGNED BY: AAB
DRAWN BY: KMT
REVIEWED BY:

REV	DATE	DESCRIPTION

CONSTRUCTION SET ISSUE DATE:

SHEET TITLE: PAVING DETAILS

SHEET NUMBER: C520

FILE LOCATION: P:\1815\06-QT 0033\DETAILS PAVING.DWG TAB NAME:Paving Detail Sheet 1 USER:Tech12 SAVED:8/8/2017 3:43 PM PLOTTED:8/15/2017 1:29 PM

1. ALL TIE WIRES CROSSING THE JOINT SHALL BE REMOVED AFTER BASKETS ARE IN PLACE AND PRIOR TO POURING CONCRETE.
2. NO DOWELS ALLOWED WITHIN 12" OF A CROSS JOINT.

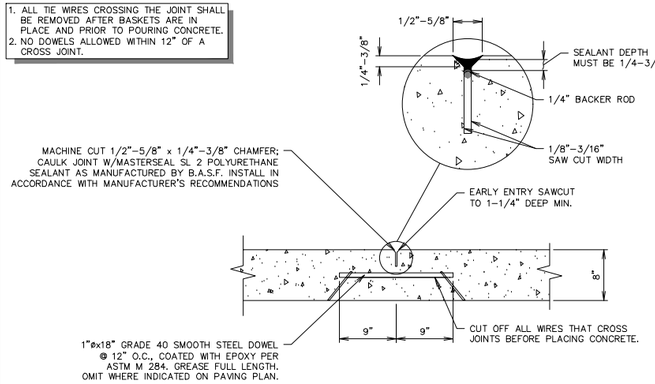

L1 PAVING JOINT - CONTRACTION

NTS | SN: PD007A008

USE WHERE QT CONCRETE EDGE ABUTS EXISTING PAVING SECTION BY OTHERS.

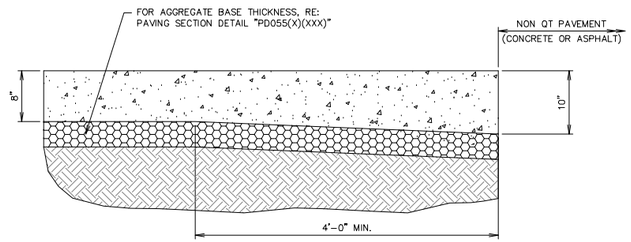

L6 THICKENED EDGE SECTION

NTS | SN: PD008A006

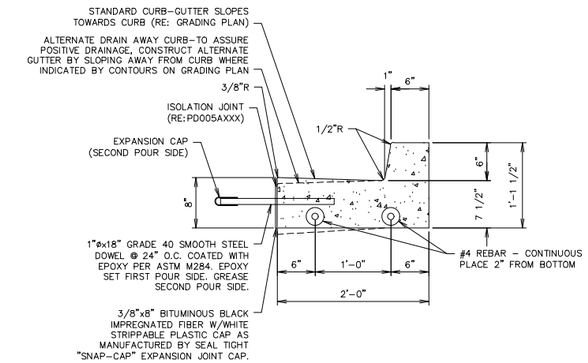

L11 CURB DETAIL - BARRIER

NTS | SN: PD009A009

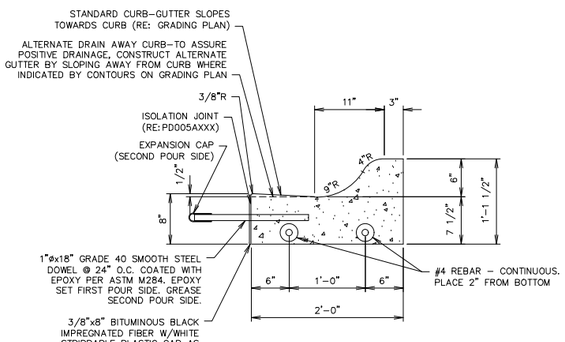

F1 CURB DETAIL - ROLLOVER / MOUNTABLE

NTS | SN: PD010B008

1. IF DISTANCE FROM PAVER TO SIDEWALK IS LESS THAN 2', PLACE PAVERS TO SIDEWALK.
2. 5' ON EXTERIOR DRIVES, 3' ON INTERIOR.
3. STAMPED BRICK PATTERN SHALL BE MATCRETE ALUMINUM STAMP 4"x8" BRICK RUNNING BOND (PART # P-12)

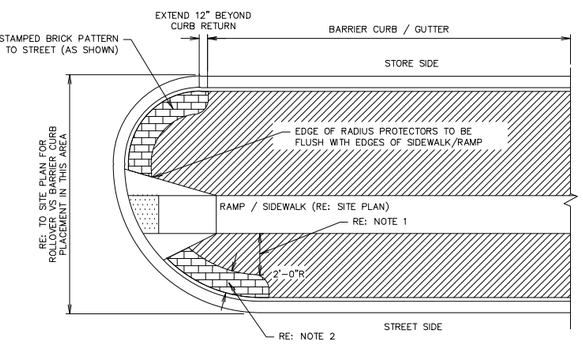

F6 RADIUS PROTECTOR PLAN

NTS | SN: PD016A003

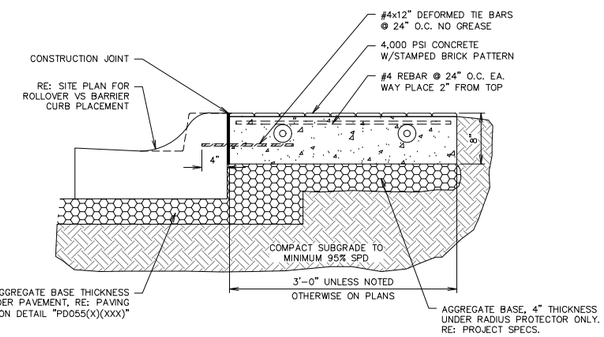

F11 STANDARD RADIUS PROTECTOR SECTION

NTS | SN: PD017A008

1. "DOG LEGS" SHALL BE 3' MIN.
2. "TAB" PORTION OF SLAB SHALL BE 3' MIN.
3. "DOG LEG" TO BE 90° TO THE CURB.
4. "DOG LEG" JOINTS SHALL BE DOWELED CONSTRUCTION REGARDLESS OF REMAINDER OF JOINT TYPE.

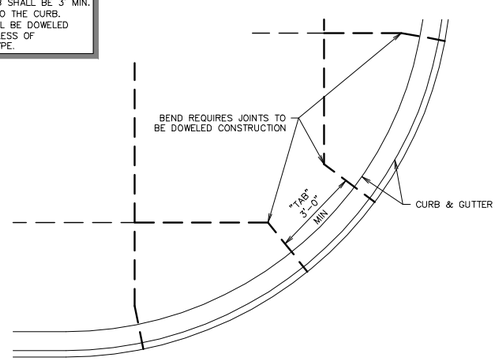

A1 TYPICAL JOINT LAYOUT - AT RADIUS AND ANGLES

NTS | SN: PD019A007

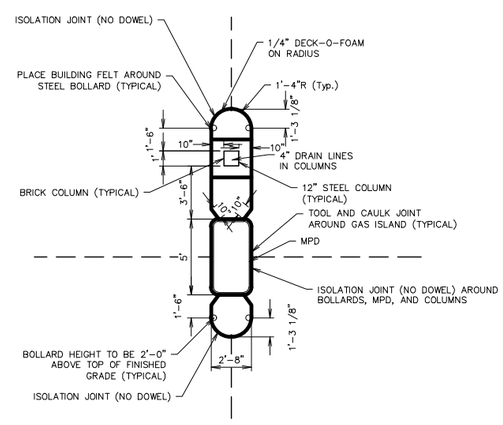

A6 MPD BLOWUP DETAIL

NTS | SN:

FUEL MANWAYS DO NOT USE ISOLATION JOINTS, UTILITY MANHOLE STRUCTURES USE ISOLATION JOINT AT MANHOLE.

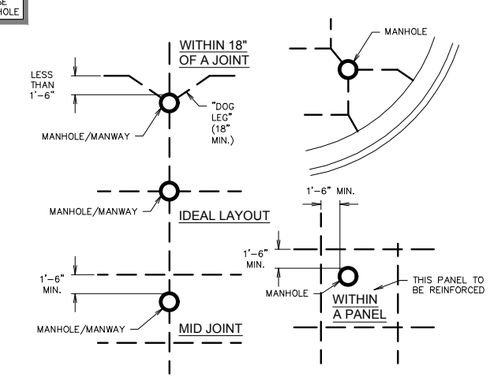

A11 TYPICAL MANHOLE / FUEL MANWAY JOINT LAYOUTS

NTS | SN: PD021A003

LICENSED PROFESSIONAL ENGINEER Alan Betchan 25330 OKLAHOMA

PROJECT NO.:

AAB Engineering, LLC
Engineering • Surveying
P.O. Box 2136,
Sand Springs, OK 74063
OK CA#6318 Exp: June 30, 2018
Office: (918) 514-4283
Fax: (918) 514-4288

QuikTrip No. 0033

2400 E. KENOSHA ST.
BROKEN ARROW, OK

© COPYRIGHT QUIKTRIP CORPORATION 2011 ANY UNAUTHORIZED USE, REPRODUCTION, PUBLICATION, DISTRIBUTION, OR SALE IN WHOLE OR IN PART, IS STRICTLY FORBIDDEN.

PROTOTYPE: P-91 (05/02/2017)
DIVISION: BROKEN ARROW
VERSION: 001
DESIGNED BY: AAB
DRAWN BY: KMT
REVIEWED BY:

REV	DATE	DESCRIPTION

CONSTRUCTION SET ISSUE DATE:

SHEET TITLE: PAVING DETAILS

SHEET NUMBER: C521

FILE LOCATION: P:\1815\06-QT 0033\DETAILS PAVING.DWG TAB NAME: Paving Detail Sheet 2 USER: tech12 SAVED: 8/8/2017 3:43 PM PLOTTED: 8/15/2017 1:30 PM

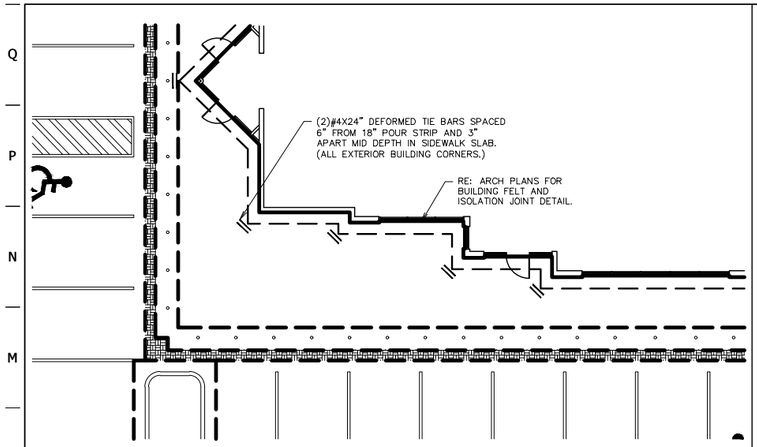

L1 GEN III SIDEWALK REINFORCING AT BUILDING CORNERS

NTS SN: PD022A006

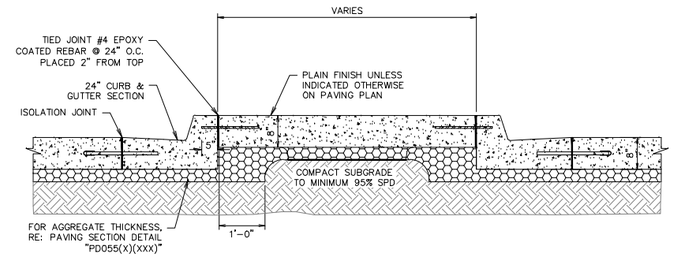

L6 ISLAND SECTION B-B

NTS SN: PD024A007

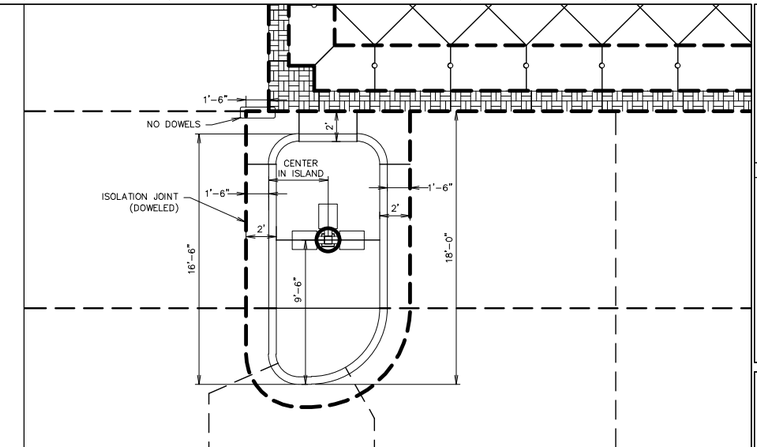

L11 TYPE A ISLAND JOINT DETAIL

NTS SN: PD035A007

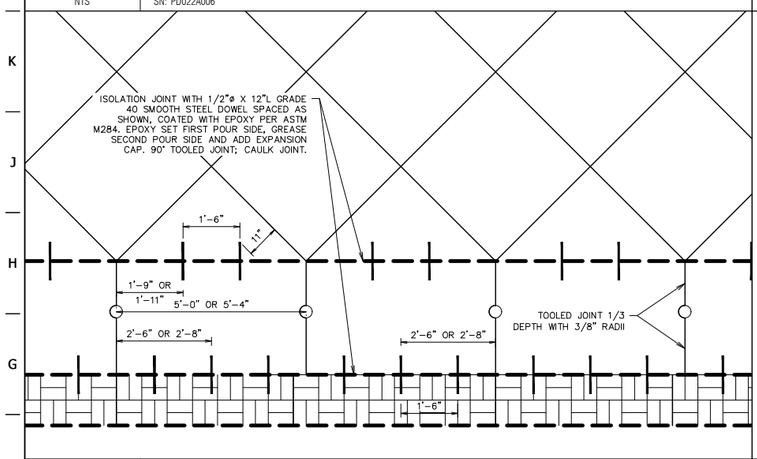

F1 DOWELED EXPANSION JOINTS AT BOLLARD PAVEMENT SECTION

NTS SN: PD036A003

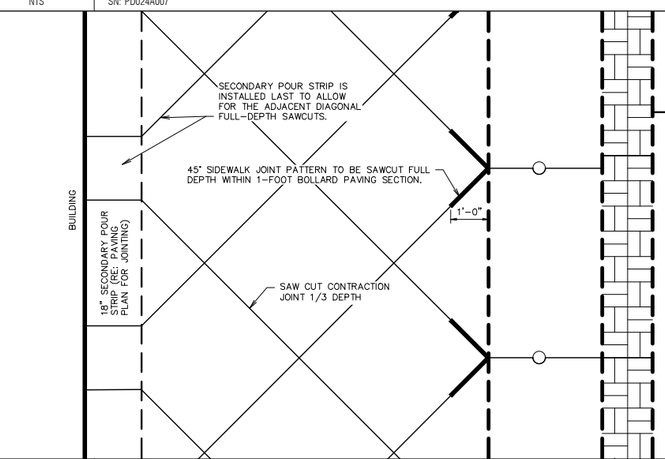

F6 45° SIDEWALK JOINT SAWCUT DETAIL

NTS SN: PD037A005

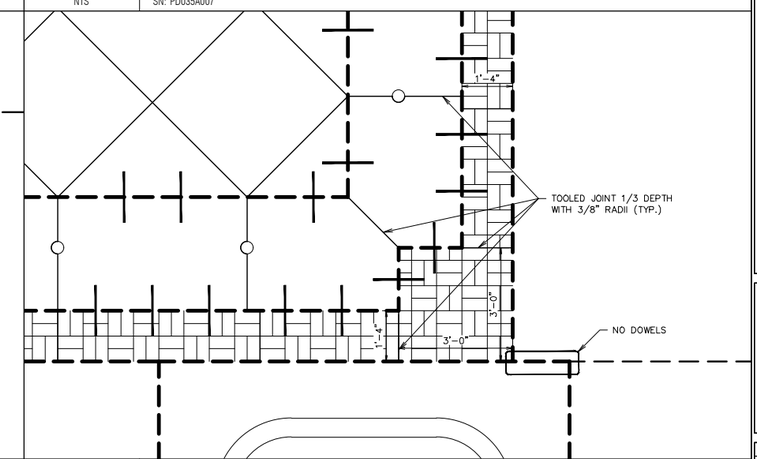

F11 FRONT SIDEWALK QT ACCENT CONCRETE STRIP CORNER DETAIL

NTS SN: PD038A003

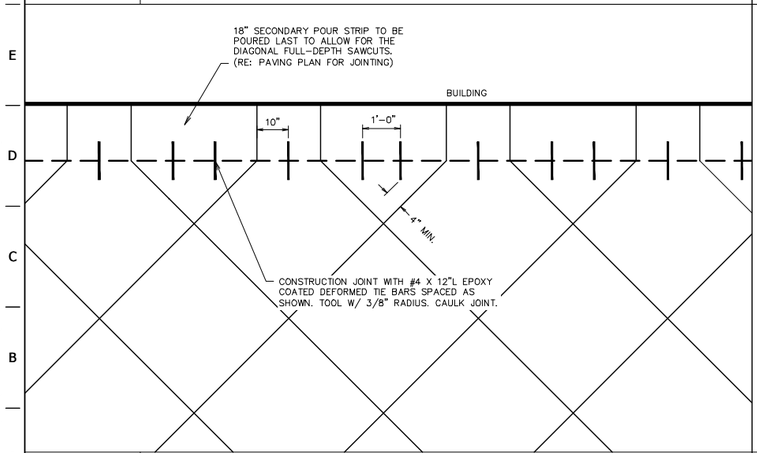

A1 DOWELED JOINT BETWEEN POUR STRIP & FRONT SIDEWALK DETAIL

NTS SN: PD039A002

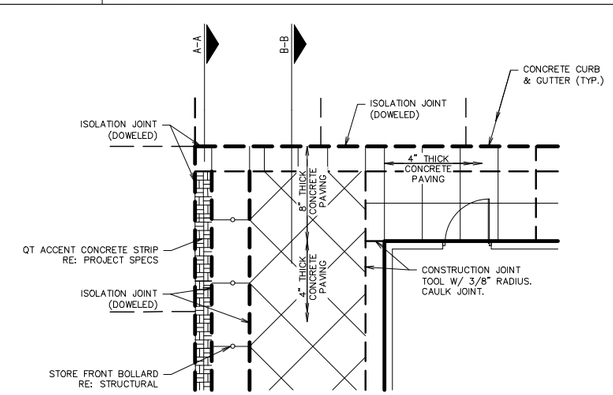

PLAN

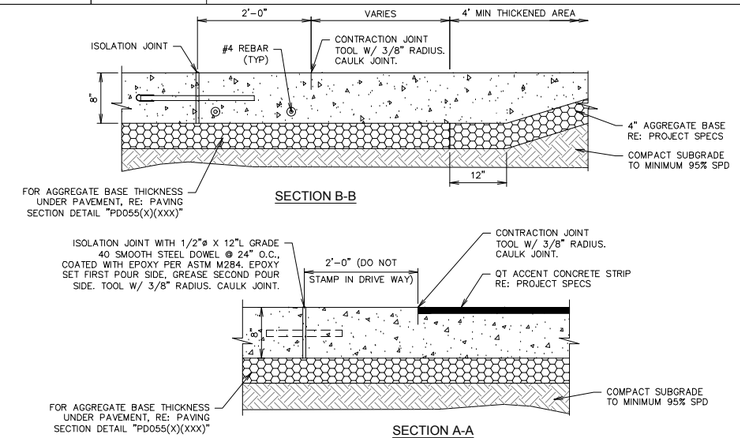

A6 GEN III QT ACCENT CONCRETE TERMINATION DETAIL

NTS SN: PD040A0010

LICENSED PROFESSIONAL ENGINEER Alan Betchan 25330 OKLAHOMA

PROJECT NO.:

AAB Engineering, LLC
Engineering • Surveying
P.O. Box 2136,
Sand Springs, OK 74063
OK CA#6318 Exp: June 30, 2018
Office: (918) 514-4283
Fax: (918) 514-4288

QuikTrip No. 0033

2400 E. KENOSHA ST.
BROKEN ARROW, OK

© COPYRIGHT QUIKTRIP CORPORATION 2011 ANY UNAUTHORIZED USE, REPRODUCTION, PUBLICATION, DISTRIBUTION, OR SALE IN WHOLE OR IN PART, IS STRICTLY FORBIDDEN.

PROTOTYPE:	P-91 (05/02/2017)
DIVISION:	BROKEN ARROW
VERSION:	001
DESIGNED BY:	AAB
DRAWN BY:	KMT
REVIEWED BY:	

REV	DATE	DESCRIPTION

CONSTRUCTION SET ISSUE DATE:

SHEET TITLE: PAVING DETAILS

SHEET NUMBER: C522

FILE LOCATION: P:\1815\06-QT 0033\DETAILS PAVING.DWG TAB NAME: Paving Detail Sheet 3 USER: Tech12 SAVED: 8/8/2017 3:43 PM PLOTTED: 8/15/2017 1:30 PM

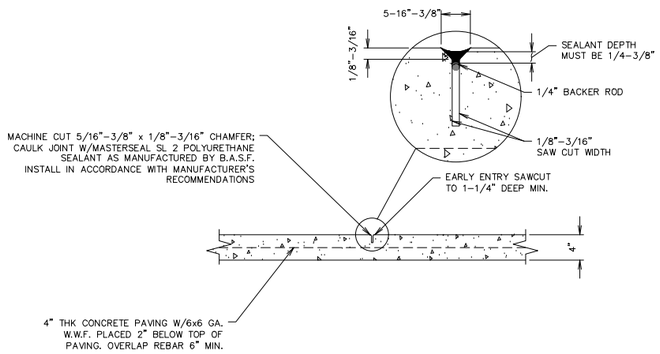

L1 BUILDING SIDEWALK JOINT - CONTRACTION

NTS | SN: PD061A003

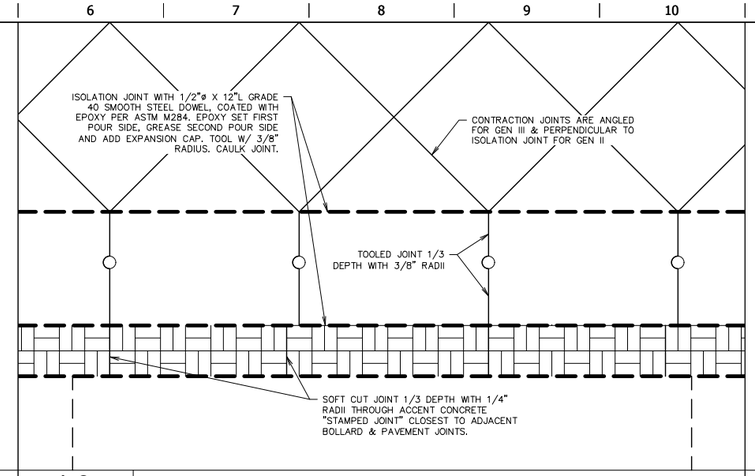

L6 QT ACCENT CONCRETE STRIP JOINTING DETAIL

NTS | SN: PD041A003

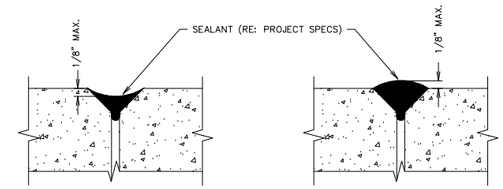

L11 PAVING JOINT - SEALANT TOLERANCE DETAIL

NTS | SN: PD042A003

PAVING LEGEND

- ISOLATION – DOWEL
- ISOLATION – NO DOWEL
- CONSTRUCTION – DOWEL
- CONSTRUCTION – NO DOWEL
- CONTRACTION – DOWEL
- CONTRACTION – NO DOWEL
- THICKENED EDGE
- R — REINFORCED PANEL
- RADIUS PROTECTOR
- MOUNTABLE CURB

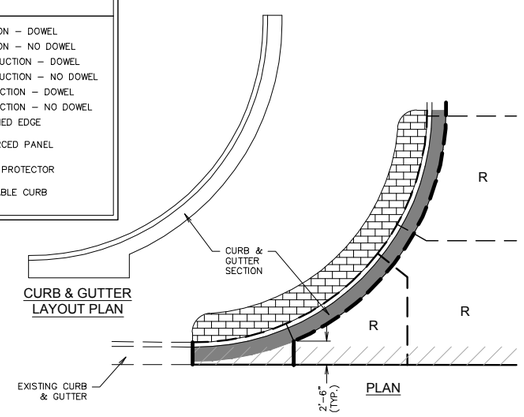

CURB & GUTTER LAYOUT PLAN

F1 CURB DETAIL - DRIVE ENTRANCE

NTS | SN: PD043A001

1. 1"øx18" SMOOTH STEEL DOWEL BARS @ 12" O.C., EPOXY COATED.
2. NOT REINFORCED EXCEPT WHEN PANELS WITH LENGTH TO WIDTH RATIO EXCEEDS 1.25, THEN #4 REBAR @ 24" O.C. BOTH WAYS, 2" CLEAR FROM TOP OF SLAB.
3. IF ADJACENT JOINT DOES NOT LINE UP (TEE JOINT) OMIT DOWELS ON THAT SIDE OF PANEL.
4. DOWEL BASKET WIRES SHALL NOT CROSS JOINTS. CROSS WIRES MUST BE CUT AND REMOVED PRIOR TO POUR.

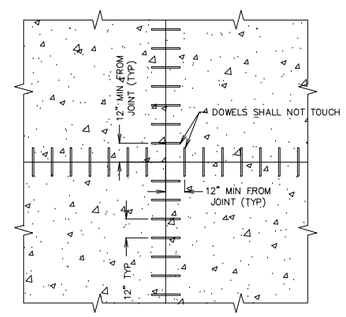

F6 DOWEL - JOINT SEPARATION DETAIL

NTS | SN: PD046A001

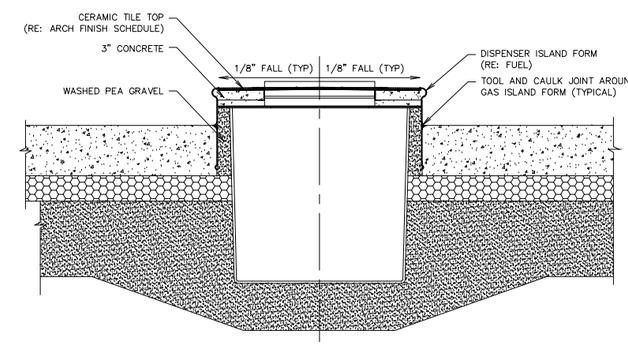

F11 DISPENSER ISLAND FORM - CONCRETE FILL & JOINTING DETAIL

NTS | SN: PD047A003

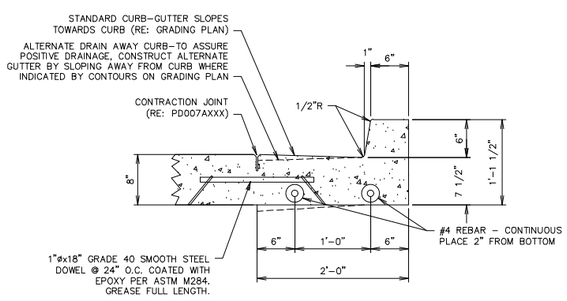

A1 MONOLITHIC CURB DETAIL - BARRIER

NTS | SN: PD009B007

RE: GEOTECHNICAL REPORT FOR APPROVED METHOD OF SUBGRADE PREPARATION

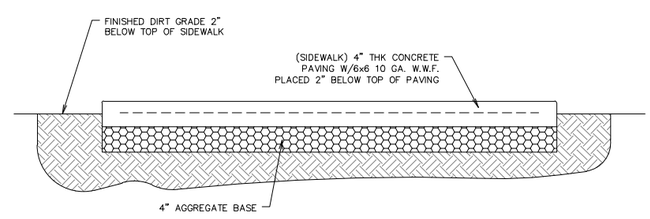

A6 SIDEWALK SECTION

NTS | SN: PD057A001

A11 NOT USED

NTS | SN:

LICENSED PROFESSIONAL ENGINEER Alan Betchan 25330 OKLAHOMA

PROJECT NO.:

AAB Engineering, LLC
Engineering • Surveying
P.O. Box 2136,
Sand Springs, OK 74063
OK CA#6318 Exp: June 30, 2018
Office: (918) 514-4283
Fax: (918) 514-4288

QuikTrip No. 0033

2400 E. KENOSHA ST.
BROKEN ARROW, OK

© COPYRIGHT QUIKTRIP CORPORATION 2011 ANY UNAUTHORIZED USE, REPRODUCTION, PUBLICATION, DISTRIBUTION, OR SALE IN WHOLE OR IN PART, IS STRICTLY FORBIDDEN.

PROTOTYPE: P-91 (05/02/2017)
DIVISION: BROKEN ARROW
VERSION: 001
DESIGNED BY: AAB
DRAWN BY: KMT
REVIEWED BY:

REV	DATE	DESCRIPTION

CONSTRUCTION SET ISSUE DATE:

SHEET TITLE: PAVING DETAILS

SHEET NUMBER: C523

FILE LOCATION: P:\1815\06-QT 0033\DETAILS PAVING.DWG TAB NAME: Paving Detail Sheet 4 USER: Tech12 SAVED: 8/8/2017 3:43 PM PLOTTED: 8/15/2017 1:30 PM

UNDER PAVEMENT, CURB, & FRENCH DRAIN PIPE MUST BE TAKEN TO STORM STRUCTURE, OR TO SURFACE DRAINAGE SWALE.

SEE GRADING PLAN FOR LOCATION BEFORE TRANSITION TO NON PAVED TRENCH SECTION.

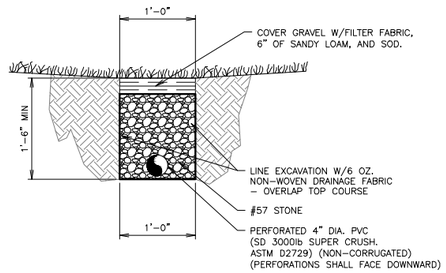

L1 FRENCH DRAIN SECTION

NTS | SN: TD004A004

ALL COPPER PIPING SHALL BE TYPE K WRAPPED IN 3M VINYL TAPE FROM THE BUILDING TO THE METER.

ALWAYS ATTEMPT TO RUN UTILITY TRENCH OUTSIDE OF PAVED AREA WHEN AVAILABLE – RE: PLAN SHEETS.

RE. PROJECT SPECS FOR GRADATION TABLE.

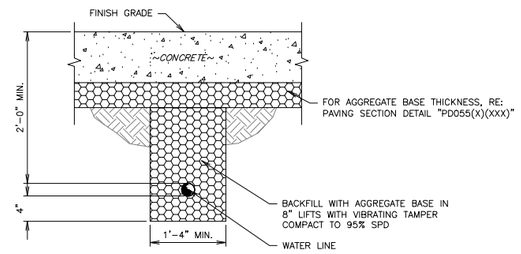

L6 ON-SITE WATER LINE TRENCH SECTION (PAVED)

NTS | SN: TD005A004

EXTEND 18" BEYOND BACK OF CURB (OUTSIDE OF ALL PAVED AREAS) BEFORE TRANSITIONING TO NON-PAVED TRENCH DETAIL.

MIN. DRAIN PIPE CLEARANCE MAY BEGIN @ 1'-0" FROM T.O.P. TO FINISH GRADE IF CONDITIONS WARRANT DUE TO GRADES, ROCK, ETC.

RE. PROJECT SPECS FOR GRADATION TABLE.

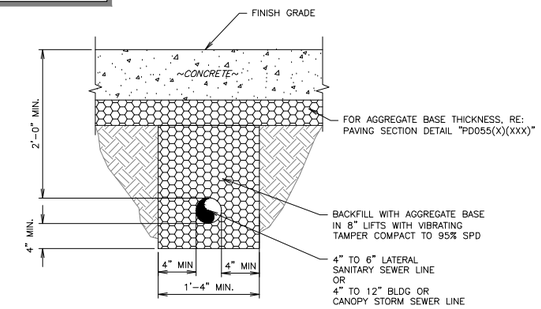

L11 BUILDING OR CANOPY DRAINAGE TRENCH SECTION (PAVED)

NTS | SN: TD006A004

TRENCH MATERIAL SHALL CONSIST OF DRY, ROCK-FREE DIRT.

MIN. DRAIN PIPE CLEARANCE MAY BEGIN @ 1'-0" FROM T.O.P. TO FINISH GRADE IF CONDITIONS WARRANT DUE TO GRADES, ROCK, ETC.

UNDER PAVEMENT, CURB, & FRENCH DRAIN PIPE MUST BE TAKEN TO STORM STRUCTURE, OR TO SURFACE DRAINAGE SWALE.

SEE GRADING PLAN FOR LOCATION BEFORE TRANSITION TO NON PAVED TRENCH SECTION.

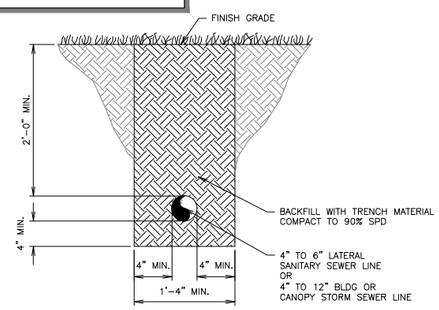

F1 BUILDING OR CANOPY DRAINAGE TRENCH SECTION (NON PAVED)

NTS | SN: TD007A002

TRENCH MATERIAL SHALL CONSIST OF DRY, ROCK-FREE DIRT.

ALWAYS ATTEMPT TO RUN UTILITY TRENCH OUTSIDE OF PAVED AREA WHEN AVAILABLE – RE: PLAN SHEETS

IF CONDUITS ARE TO BE STACKED, UPPERMOST CONDUIT TO REMAIN MIN. OF 4'-0" BELOW GRADE WITH MIN. 12" VERTICAL CLEARANCE BETWEEN CONDUITS

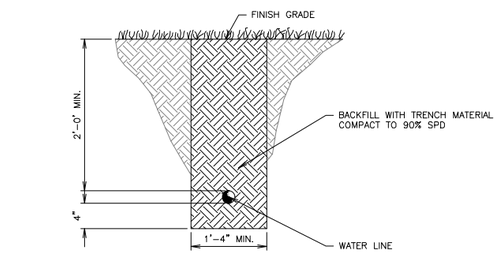

F6 ON-SITE WATER LINE TRENCH SECTION (NON PAVED)

NTS | SN: TD008A002

TRENCH MATERIAL SHALL CONSIST OF DRY, ROCK-FREE DIRT.

ALWAYS ATTEMPT TO RUN UTILITY TRENCH OUTSIDE OF PAVED AREA WHEN AVAILABLE – RE: PLAN SHEETS

EXTEND 18" BEYOND BACK OF CURB (OUTSIDE OF ALL PAVED AREAS) BEFORE TRANSITIONING TO NON-PAVED TRENCH DETAIL.

ALWAYS ATTEMPT TO RUN UTILITY TRENCH OUTSIDE OF PAVED AREA WHEN AVAILABLE – RE: PLAN SHEETS

RE. PROJECT SPECS FOR GRADATION TABLE.

IF CONDUITS ARE TO BE STACKED, UPPERMOST CONDUIT TO REMAIN MIN. OF 4'-0" BELOW GRADE WITH MIN. 12" VERTICAL CLEARANCE BETWEEN CONDUITS

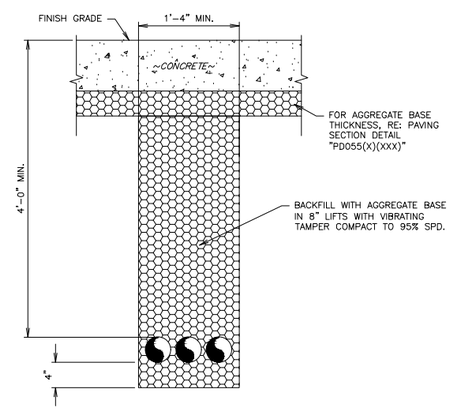

F11 PRIMARY ELECTRICAL & TELEPHONE CONDUIT TRENCH SECTION (PAVED)

NTS | SN: TD010A004

TRENCH MATERIAL SHALL CONSIST OF DRY, ROCK-FREE DIRT.

ALWAYS ATTEMPT TO RUN UTILITY TRENCH OUTSIDE OF PAVED AREA WHEN AVAILABLE – RE: PLAN SHEETS

IF CONDUITS ARE TO BE STACKED, UPPERMOST CONDUIT TO REMAIN MIN. OF 4'-0" BELOW GRADE WITH MIN. 12" VERTICAL CLEARANCE BETWEEN CONDUITS

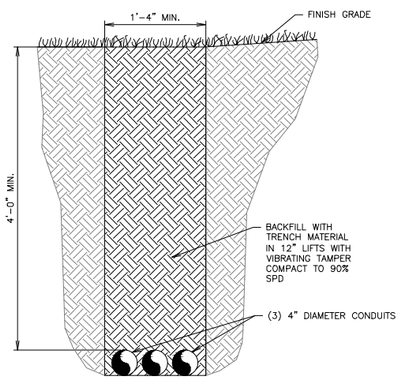

A1 PRIMARY ELECTRICAL & TELEPHONE CONDUIT TRENCH SECTION (NON PAVED)

NTS | SN: TD011A002

EXTEND 18" BEYOND BACK OF CURB (OUTSIDE OF ALL PAVED AREAS) BEFORE TRANSITIONING TO NON-PAVED TRENCH DETAIL.

ALWAYS ATTEMPT TO RUN UTILITY TRENCH OUTSIDE OF PAVED AREA WHEN AVAILABLE – RE: PLAN SHEETS

RE. PROJECT SPECS FOR GRADATION TABLE.

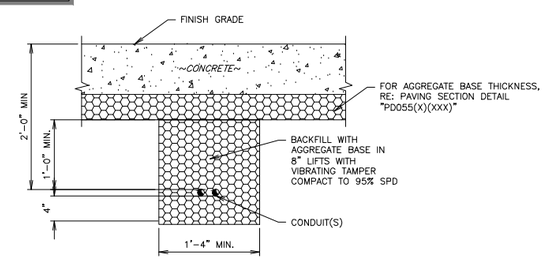

A6 1" Ø OR SMALLER ELECTRICAL CONDUIT TRENCH SECTION (PAVED)

NTS | SN: TD012A004

TRENCH MATERIAL SHALL CONSIST OF DRY, ROCK-FREE DIRT.

ALWAYS ATTEMPT TO RUN UTILITY TRENCH OUTSIDE OF PAVED AREA WHEN AVAILABLE – RE: PLAN SHEETS

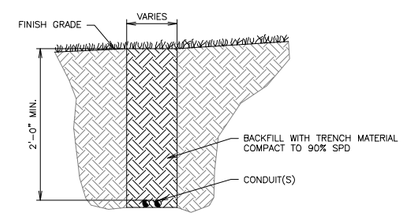

A11 1" Ø OR SMALLER ELECTRICAL CONDUIT TRENCH SECTION (UNPAVED)

NTS | SN: TD013A003

LICENSED PROFESSIONAL ENGINEER Alan Betchan 25330 OKLAHOMA

PROJECT NO.:

AAB Engineering, LLC
Engineering • Surveying
P.O. Box 2136,
Sand Springs, OK 74063
OK CA#6318 Exp: June 30, 2018
Office: (918) 514-4283
Fax: (918) 514-4288

QuikTrip No. 0033

2400 E. KENOSHA ST.
BROKEN ARROW, OK

© COPYRIGHT QUIKTRIP CORPORATION 2011
ANY UNAUTHORIZED USE, REPRODUCTION, PUBLICATION, DISTRIBUTION, OR SALE IN WHOLE OR IN PART, IS STRICTLY FORBIDDEN.

PROTOTYPE: P-91 (05/02/2017)
DIVISION: BROKEN ARROW
VERSION: 001
DESIGNED BY: AAB
DRAWN BY: KMT
REVIEWED BY:

REV	DATE	DESCRIPTION

CONSTRUCTION SET ISSUE DATE:

SHEET TITLE:
TRENCHING DETAILS

SHEET NUMBER:
C530

FILE LOCATION:P:\1815\06-QT 0033\DETAILS TRENCHING.dwg TAB NAME:Trenching Detail Sheet 1 USER:Tech12 SAVED:8/8/2017 3:43 PM PLOTTED:8/15/2017 1:30 PM

EXISTING CHANNEL EXCAVATION NOTES:
1. MUCK TO SUITABLE SOIL OR BEDROCK (SEE QT REP).

2. #57 STONE WITH FILTER FABRIC AT BOTTOM OF FINISHED CHANNEL – TO BE PLACED IF BEDROCK IS ENCOUNTERED.

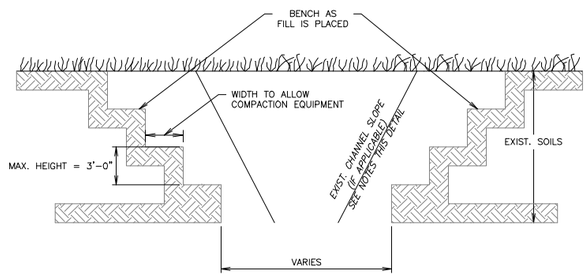

L1 EXCAVATION BENCHING DETAIL

NTS | SN: TD014A002

EXTEND THIS SECTION 5' BEYOND BACK OF CURB (OUTSIDE EDGE OF DRIVE)

RE. PROJECT SPECS FOR GRADATION TABLE.

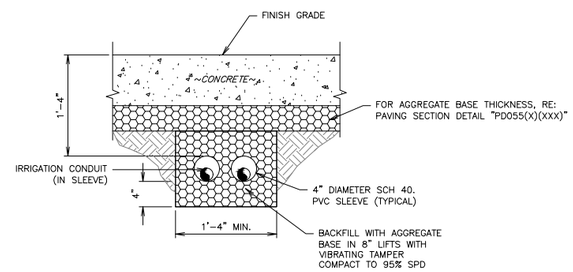

L6 TYPICAL IRRIGATION PIPING TRENCH SECTION (PAVED)

NTS | SN: TD015A004

TRENCH MATERIAL SHALL CONSIST OF DRY, ROCK-FREE DIRT.

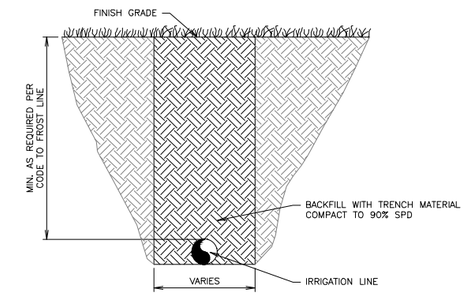

L11 TYPICAL IRRIGATION PIPING TRENCH SECTION (NON PAVED)

NTS | SN: TD016A002

F1 NOT USED

NTS | SN:

F6 NOT USED

NTS | SN:

F11 NOT USED

NTS | SN:

A1 NOT USED

NTS | SN:

A6 NOT USED

NTS | SN:

A11 NOT USED

NTS | SN:

LICENSED PROFESSIONAL ENGINEER
Alan Betchan
25330
OKLAHOMA

PROJECT NO.:

AAB Engineering, LLC
Engineering • Surveying
P.O. Box 2136,
Sand Springs, OK 74063
OK CA#6318 Exp: June 30, 2018
Office: (918) 514-4283
Fax: (918) 514-4288

QuikTrip No. 0033
2400 E. KENOSHA ST.
BROKEN ARROW, OK

© COPYRIGHT QUIKTRIP CORPORATION 2011 ANY UNAUTHORIZED USE, REPRODUCTION, PUBLICATION, DISTRIBUTION, OR SALE IN WHOLE OR IN PART, IS STRICTLY FORBIDDEN.

PROTOTYPE: P-91 (05/02/2017)
DIVISION: BROKEN ARROW
VERSION: 001
DESIGNED BY: AAB
DRAWN BY: KMT
REVIEWED BY:

REV	DATE	DESCRIPTION

CONSTRUCTION SET ISSUE DATE:

SHEET TITLE:
TRENCHING DETAILS

SHEET NUMBER:
C531

FILE LOCATION:P:\1815\06-QT 0033\DETAILS TRENCHING.dwg TAB NAME:Trenching Details Sheet 2 USER:Tech12 SAVED:8/8/2017 3:43 PM PLOTTED:8/15/2017 1:30 PM

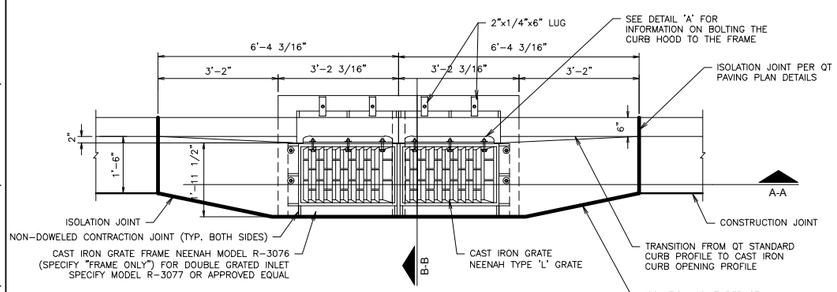

PLAN VIEW - INLET ON CONTINUOUS GRADE

1. CONTRACTOR CAN SUBSTITUTE HILTI DRILLED BOLT SYSTEM FOR ANCHOR BOLT SET IN CONCRETE FOR EASE OF CONSTRUCTION
2. 12" PIPE IS THE MINIMUM PIPE SIZE ACCEPTED BY QUIKTRIP. PIPE TYPE MAY VARY BY REGION AND MUNICIPALITY. IF HYDRAULICS REQUIRES A LARGER PIPE, DEPTH OF THE INLET MAY NEED TO BE INCREASED. AT NO TIME SHALL THE CLEARANCE FROM THE TOP OF PIPE TO THE BOTTOM OF INLET BE LESS THAN 6".
3. AT TIMES MORE THAN ONE PIPE MAY PENETRATE INTO A CATCH BASIN. WHEN THIS OCCURS THE OUTLET PIPE IS TO BE SET AT THE INVERT ELEVATION AND ALL OTHER PIPES ARE TO BE SET A MINIMUM OF 2" HIGHER. AT NO TIME SHALL THE CLEARANCE FROM THE TOP OF THE HIGHEST/LARGEST PIPE TO THE BOTTOM OF THE FRAME BE LESS THAN 6".
4. UNDER CURB AND UNDER PAVEMENT DRAIN DETAILS ARE SHOWN ON "DRAINAGE AND UTILITY TRENCH DETAILS SHEETS" INLCUDED WITH THIS SET OF PLANS. THIS DOES NOT APPLY TO THE ARIZONA DIVISION.

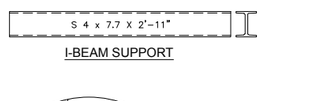

I-BEAM SUPPORT

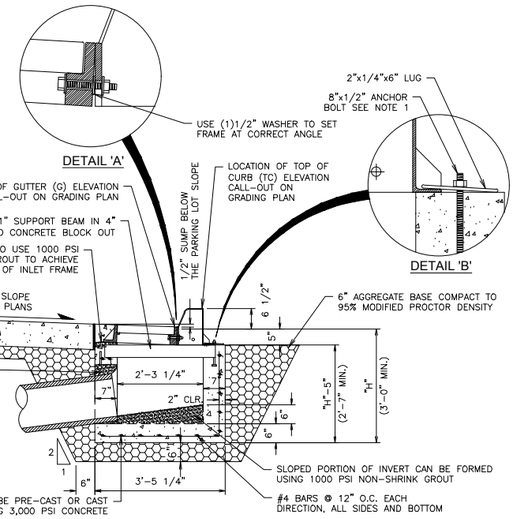

SECTION B-B

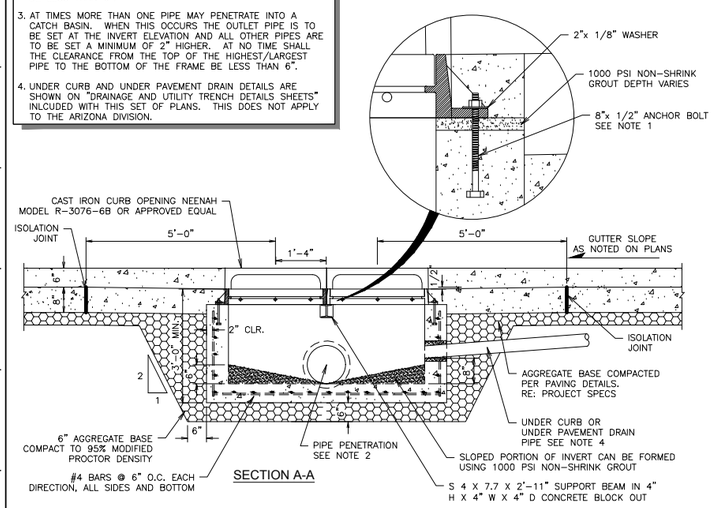

SECTION A-A

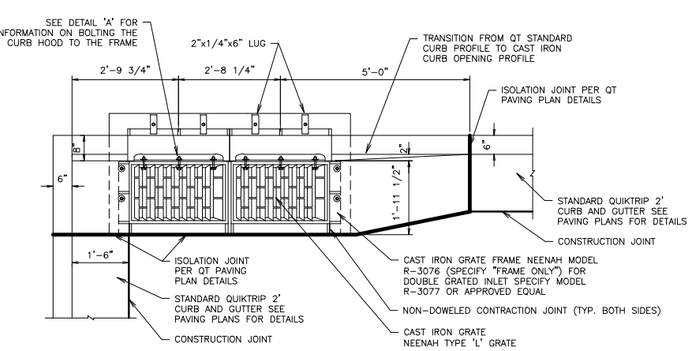

PLAN VIEW - INLET IN 90° PARKING

L11	NOT USED
NTS	SN:

F1	CATCH BASIN INLET DETAIL (DOUBLE)
NTS	SN: DD001B08

F11	NOT USED
NTS	SN:

A1	NOT USED
NTS	SN:

A6	NOT USED
NTS	SN:

A11	NOT USED
NTS	SN:

LICENSED PROFESSIONAL ENGINEER Alan Betchan 25330 OKLAHOMA

PROJECT NO.:

AAB Engineering, LLC
Engineering • Surveying
P.O. Box 2136,
Sand Springs, OK 74063
OK CA#6318 Exp: June 30, 2018
Office: (918) 514-4283
Fax: (918) 514-4288

QuikTrip No. 0033

2400 E. KENOSHA ST.
BROKEN ARROW, OK

© COPYRIGHT QUIKTRIP CORPORATION 2011 ANY UNAUTHORIZED USE, REPRODUCTION, PUBLICATION, DISTRIBUTION, OR SALE IN WHOLE OR IN PART, IS STRICTLY FORBIDDEN.

PROTOTYPE: P-91 (05/02/2017)
DIVISION: BROKEN ARROW
VERSION: 001
DESIGNED BY: AAB
DRAWN BY: KMT
REVIEWED BY:

REV	DATE	DESCRIPTION

CONSTRUCTION SET ISSUE DATE:

SHEET TITLE:
DRAINAGE DETAILS

SHEET NUMBER:
C541

FILE LOCATION:P:\1815\06-QT 0033\DETAILS DRAINAGE.dwg TAB NAME:Drainage Detail Sheet 2 USER:Clint SAVED:8/14/2017 12:38 PM PLOTTED:8/15/2017 1:30 PM

BENCHMARKS

ADS CONTROL "BA 33" – 5/8" REBAR – 1 1/2" ALUMINUM CAP

ELEVATION=732.73'

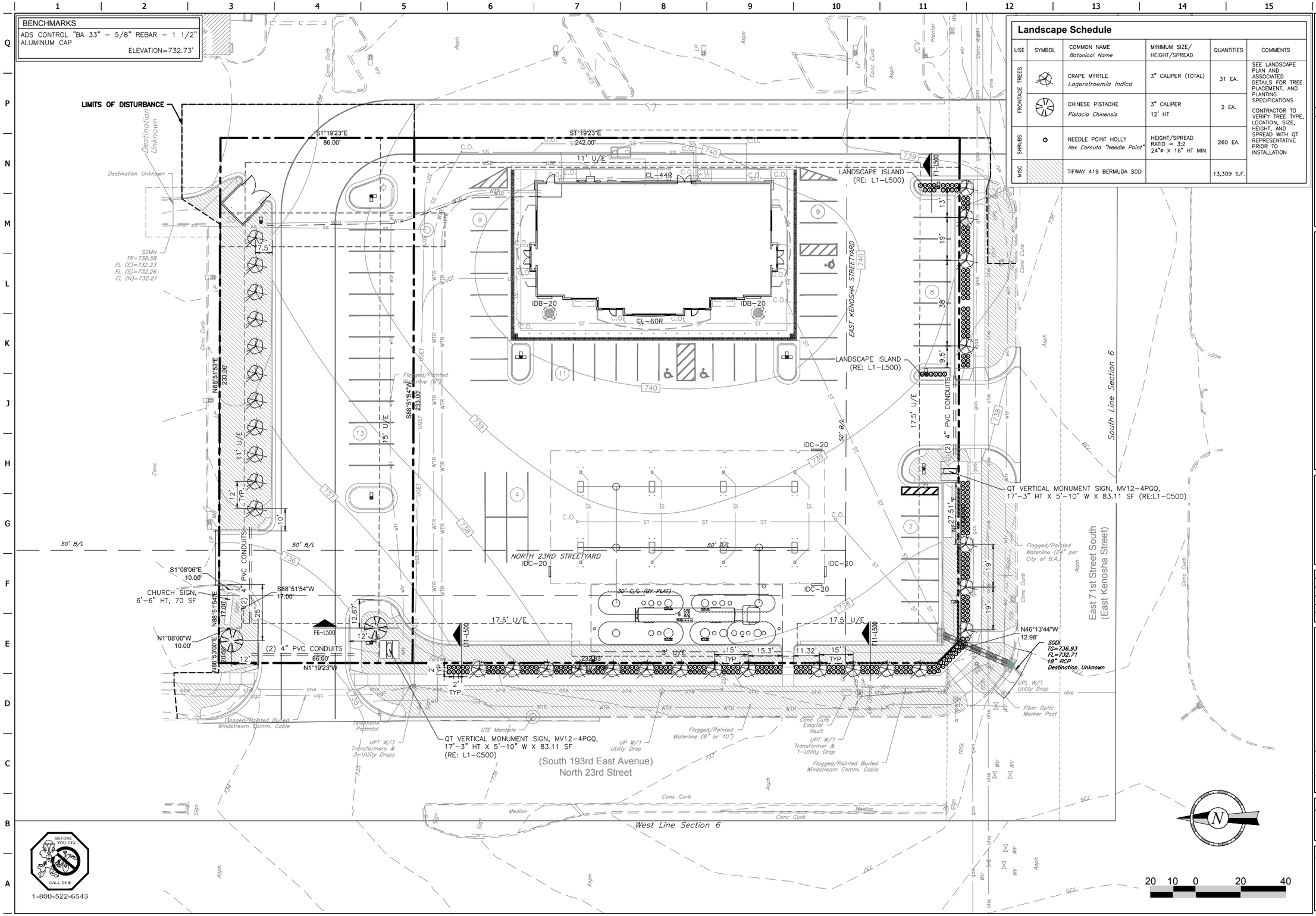

Landscape Schedule

USE	SYMBOL	COMMON NAME / *Botanical Name*	MINIMUM SIZE/ HEIGHT/SPREAD	QUANTITIES	COMMENTS
FRONTAGE TREES		CRAPE MYRTLE *Lagerstroemia Indica*	3" CALIPER (TOTAL)	31 EA.	SEE LANDSCAPE PLAN AND ASSOCIATED DETAILS FOR TREE PLACEMENT, AND PLANTING SPECIFICATIONS CONTRACTOR TO VERIFY TREE TYPE, LOCATION, SIZE, HEIGHT, AND SPREAD WITH QT REPRESENTATIVE PRIOR TO INSTALLATION
FRONTAGE TREES		CHINESE PISTACHE *Pistacia Chinensis*	3" CALIPER 12' HT	2 EA.	
SHRUBS		NEEDLE POINT HOLLY *Ilex Cornuta "Needle Point"*	HEIGHT/SPREAD RATIO = 3:2 24"ø X 16" HT MIN	260 EA.	
MISC		TIFWAY 419 BERMUDA SOD		13,309 S.F.	

LICENSED PROFESSIONAL ENGINEER Alan Betchan 25330 OKLAHOMA

PROJECT NO.:

AAB Engineering, LLC
Engineering • Surveying
P.O. Box 2136,
Sand Springs, OK 74063
OK CA#6318 Exp: June 30, 2018
Office: (918) 514-4283
Fax: (918) 514-4288

QuikTrip No. 0033

2400 E. KENOSHA ST.
BROKEN ARROW, OK

© COPYRIGHT QUIKTRIP CORPORATION 2011 ANY UNAUTHORIZED USE, REPRODUCTION, PUBLICATION, DISTRIBUTION, OR SALE IN WHOLE OR IN PART, IS STRICTLY FORBIDDEN.

PROTOTYPE: P-91 (05/02/2017)
DIVISION: BROKEN ARROW
VERSION: 001
DESIGNED BY: AAB
DRAWN BY: KMT
REVIEWED BY:

REV	DATE	DESCRIPTION

CONSTRUCTION SET ISSUE DATE:

SHEET TITLE:

LANDSCAPE PLAN

SHEET NUMBER:

L100

FILE LOCATION:P:\1815\06-QT 0033\01-0033 Civil.dwg TAB NAME:Landscape USER:Clint SAVED:8/14/2017 12:38 PM PLOTTED:8/15/2017 1:30 PM

RE: LANDSCAPE PLAN FOR SHRUB PLACEMENT AND QUANTITY.

LANDSCAPE PARKING ISLANDS ARE TO BE IRRIGATED WITH A DRIP LINE SYSTEM. A SPRAY OR ROTARY HEAD SPRINKLER SYSTEM IS NOT AN ACCEPTABLE IRRIGATION METHOD FOR LANDSCAPE PARKING ISLANDS. (RE: PROJECT SPECS.)

RE: STORM PLAN TO DETERMINE IF USE OF LANDSCAPE BED DRAIN PIPE IS REQUIRED

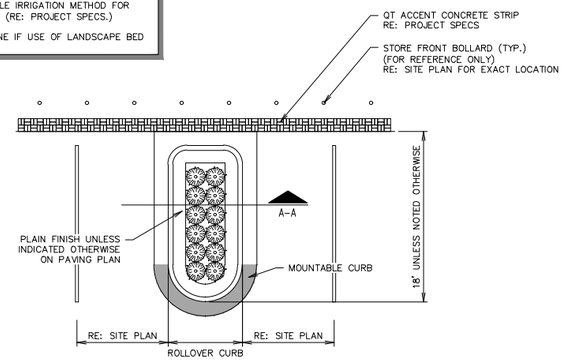

PLAN

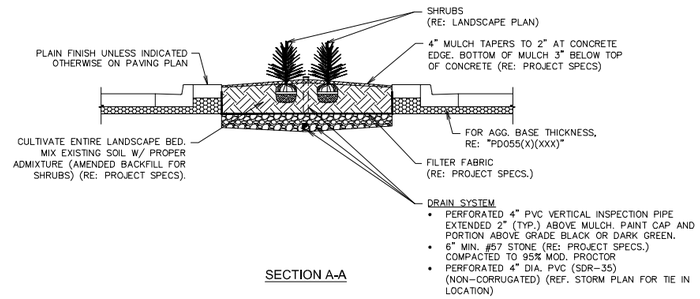

SECTION A-A

L1 PARKING ISLAND W/ SHRUBS LANDSCAPE DETAIL (W/ RADIUS PROTECTOR)

NTS | SN: LD009A010

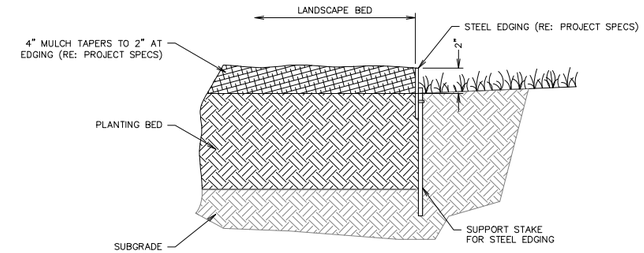

L11 LANDSCAPE STEEL EDGING DETAIL

NTS | SN: LD006A004

NOTE: SLOPE ON LAWN AREAS NOT TO EXCEED 3:1 UNLESS NOTED OTHERWISE (RE: GRADING PLAN)

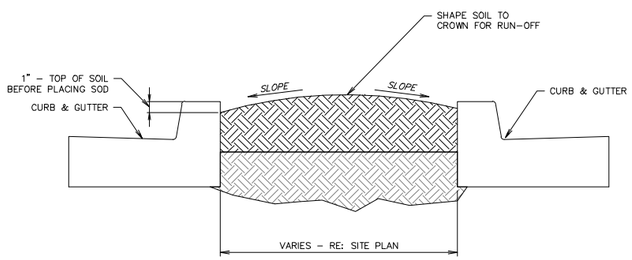

F1 TYPICAL LAWN SECTION

NTS | SN: LD007A002

DUCK BILL KITS:
2"TREES - MODEL 40 RBK KIT (OR EQUIVALENT)
3"TREES - MODEL 68 RBK KIT (OR EQUIVALENT)
6"TREES - MODEL 88 RBK KIT (OR EQUIVALENT)

TREE RING KITS:
2"TREES - 14TR3 1 PIECE (OR EQUIVALENT)
3"TREES - 14TR3 1 PIECE (OR EQUIVALENT
6"TREES - 14TR6 2 PIECE (OR EQUIVALENT)

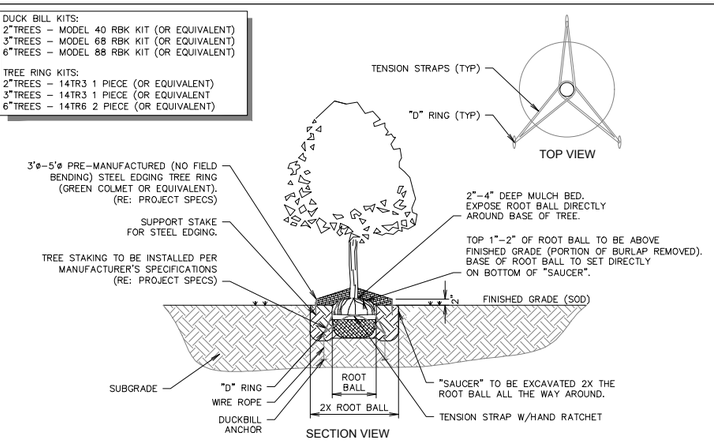

SECTION VIEW

F6 TREE PLANTING DETAIL - DUCKBILL

NTS | SN: LD008B001

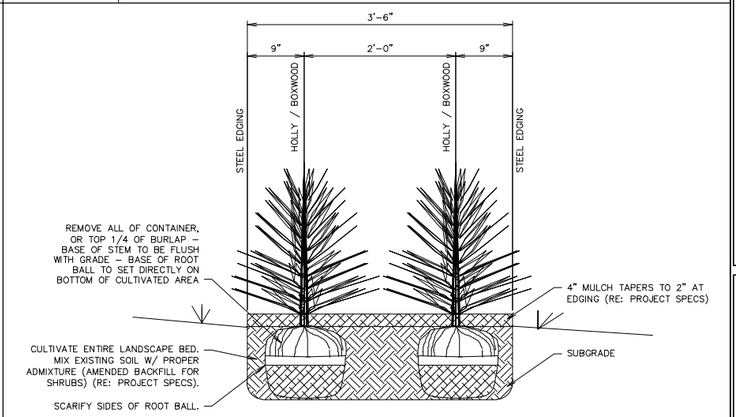

F11 SHRUB SCREENING SECTION B-B

NTS | SN: LD005A004

A1 NOT USED

NTS | SN:

A6 NOT USED

NTS | SN:

A11 NOT USED

NTS | SN:

LICENSED PROFESSIONAL ENGINEER
Alan Betchan
25330
OKLAHOMA

PROJECT NO.:

AAB Engineering, LLC
Engineering • Surveying
P.O. Box 2136,
Sand Springs, OK 74063
OK CA#6318 Exp: June 30, 2018
Office: (918) 514-4283
Fax: (918) 514-4288

QuikTrip No. 0033

2400 E. KENOSHA ST.
BROKEN ARROW, OK

© COPYRIGHT QUIKTRIP CORPORATION 2011 ANY UNAUTHORIZED USE, REPRODUCTION, PUBLICATION, DISTRIBUTION, OR SALE IN WHOLE OR IN PART, IS STRICTLY FORBIDDEN.

PROTOTYPE: P-91 (05/02/2017)
DIVISION: BROKEN ARROW
VERSION: 001
DESIGNED BY: AAB
DRAWN BY: KMT
REVIEWED BY:

REV	DATE	DESCRIPTION

CONSTRUCTION SET ISSUE DATE:

SHEET TITLE:
LANDSCAPE DETAILS

SHEET NUMBER:
L500

FILE LOCATION: P:\1815\06-QT 0033\DETAILS LS.dwg TAB NAME:LS Detail Sheet 1 USER:Tech12 SAVED:8/8/2017 3:44 PM PLOTTED:8/15/2017 1:30 PM