OWNER: 322 COMMERCIAL, L.L.C.
CONTACT: WILLIAM A. LEET
919 W. ELMIRA ST
BROKEN ARROW, OKLAHOMA 74012
PHONE: 918-408-2311

ENGINEER: JR DONELSON, INC.
12820 SO. MEMORIAL DR., #100
BIXBY, OKLAHOMA 74008
PHONE: 918-394-3030
EMAIL: JRDON@TULSACOXMAIL.COM

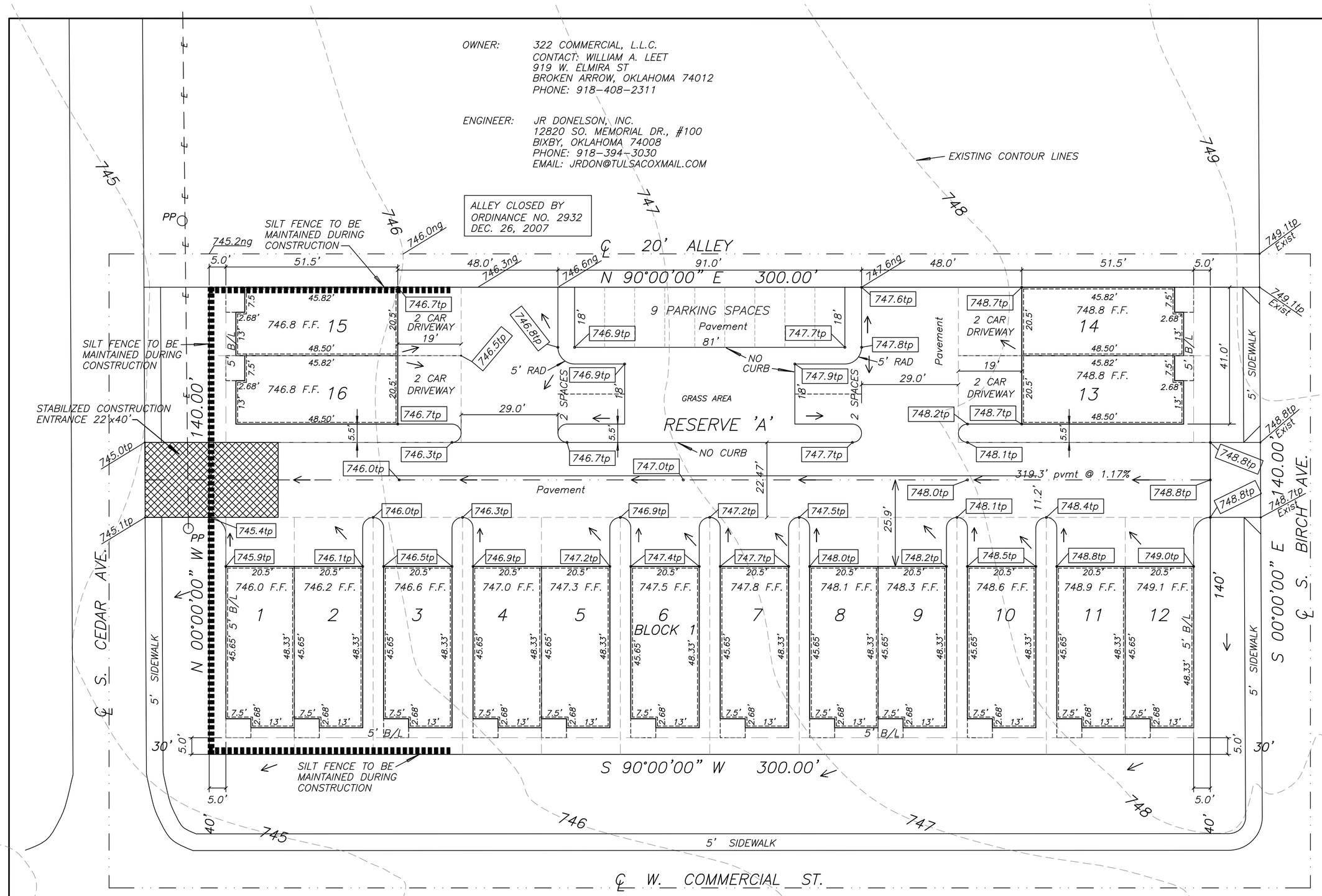

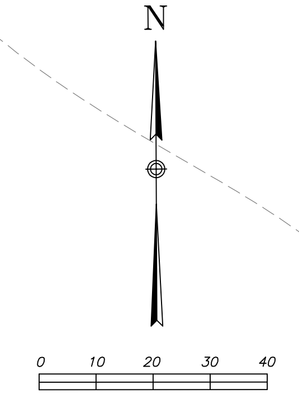

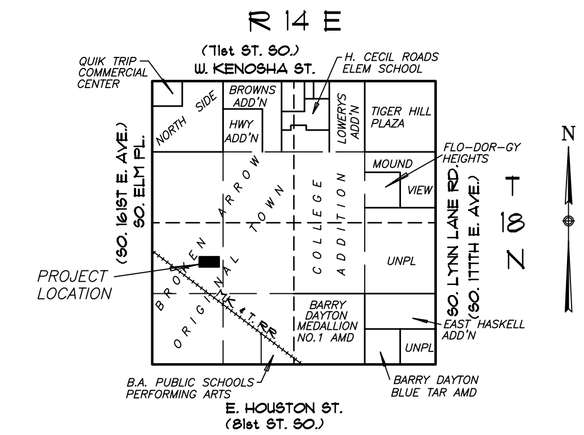

SECTION 11

LOCATION MAP

SCALE: 1"=2000'

LOT DATA

AREA: 42,400 SF 0.9733 ACRES
DATE: 5/03/16
FILE: LEET\ LEETSITE2.DWG

LEGEND

U/E	UTILITY EASEMENT
B/L	BUILDING LINE
RAD	RADIUS
BLDG	BUILDING
PP	POWER POLE
DOC	DOCUMENT
SF	SQUARE FEET
F.F.	FINISH FLOOR
tc	TOP OF CURB
tp	TOP OF PAVEMENT
pvmt	PAVEMENT
7707	ADDRESS
℄	CENTERLINE
←	FLOW DIRECTION

GENERAL SILT FENCE NOTES

1. STEEL POSTS WHICH SUPPORT THE SILT FENCE SHALL BE INSTALLED ON A SLIGHT ANGLE TOWARD THE ANTICIPATED RUNOFF SOURCE.
2. THE TOE OF THE SILT FENCE SHALL BE TRENCHED IN WITH A SPADE OR MECHANICAL TRENCHER, SO THAT THE DOWNSLOPE FACE OF THE TRENCH IS FLAT AND PERPENDICULAR TO THE LINE OF FLOW.
3. THE TRENCH SHOULD BE A MINIMUM OF 6 INCHES DEEP AND 3-4 FEET WIDE TO ALLOW FOR THE SILT FENCE TO BE LAID IN THE GROUND AND BACKFILLED.
4. SILT FENCE SHOULD BE SECURELY FASTENED TO EACH STEEL SUPPORT POST OR TO WOVEN WIRE, WHICH IS IN TURN ATTACHED TO THE STEEL FENCE POSTS.
5. INSPECTION SHALL BE FREQUENT AND REPAIR OR REPLACEMENT SHALL BE MADE PROMPTLY AS NEEDED.
6. SILT FENCE SHALL BE REMOVED WHEN IT HAS SERVED ITS USEFULNESS, SO AS NOT TO BLOCK OR IMPEDE STORM FLOW OR DRAINAGE.
7. SEDIMENT TRAPPED BY THIS PRACTICE SHALL BE DISPOSED OF IN AN APPROVED SITE IN A MANNER THAT WILL NOT CONTRIBUTE TO ADDITIONAL SILTATION.
8. ACCUMULATED SILT SHALL BE REMOVED WHEN IT REACHES A DEPTH OF 6 INCHES AND DISPOSED OF IN AN APPROVED SPOIL SITE OR AS IN NO. 7 ABOVE.
9. SILT SCREEN TO BE: WOVEN WIRE FENCE (14 1/2 GAGE MIN, MAX. 6" MESH SPACING) WITH FILTER CLOTH OVER
10. HEIGHT OF FILTER 16" MIN.
11. FILTER CLOTH, FILTER X, MIRAFI 100X, STABILINKA T140N OR EQUAL

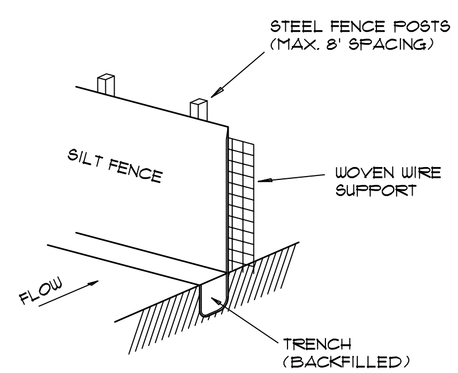

SILT FENCE

NOTE:
1. Stormwater detention accommodations for this site are provided by Fee-In Lieu Of Detention Determination # DD-42916-07. Proposed increased impervious area for this site is 30,582 square feet. The fee shall be paid to the City of Broken Arrow prior to, or at the time of, building permit issuance.

LEGAL DESCRIPTION OF PROPERTY:

LOTS 13 THRU 24, BLOCK 40, BROKEN ARROW ORIGINAL TOWN, TULSA COUNTY, OKLAHOMA, ACCORDING TO THE RECORDED PLAT THEREOF.

BEFORE YOU DIG.. CALL OKIE 1-800-522-6543

COPYRIGHT

DATE OF PRINTS:

CHK'D FOR CITY BY:		
DESIGNED BY:		
CHECKED BY:		
DRAWN BY:		
REVISION	BY	DATE

FOR REVIEW ONLY

REGISTERED PROFESSIONAL ENGINEER SEAL

SITE ADDRESS:
302-322 W. Commercial St.

CASE NO.

COMMERCIAL ST BROWNSTONES

RE-SUB OF LOTS 13-24 BLOCK 40 BROKEN ARROW - ORIGINAL TOWN

CITY OF BROKEN ARROW, OK

PLANS & ESTIMATES PREPARED BY: JR DONELSON, INC. C.A. NO. 5611 EXP.DATE 6/30/17
12820 SO. MEMORIAL DR., #100, BIXBY, OK. 74008 918-394-3030

PLAN SCALE 1"= 20'

GRADING AND EROSION CONTROL PLAN

PROFILE SCALE HORIZONTAL 1"= VERTICAL 1"=

RECOMMENDED: DEVELOPMENT SERVICES MANAGER

RECOMMENDED: ENGINEERING DEPUTY DIRECTOR

APPROVED: PUBLIC WORKS DIR

FILE: DRAWING LEETSITE2 DATE: 5/03/2016

ATLAS PAGE NO: SHEET C1 OF SHEETS