LANDSCAPE MATERIAL LIST

73	Red Maple	RM
4	Chinese Pistache	CP
4	Shumard Oak	SO
39	Water Oak	WO
15	Lacebark Elm	LE
14	Callery Bradford Pear	BP
5	Non-conforming tree NOT ON APPROVED VARIETY LIST	NC

IRRIGATION:

ALL ORDINANCE REQUIRED LANDSCAPE AREA IRRIGATED BY AN UNDERGROUND AUTOMATIC IRRIGATION SYSTEM

EXISTING INSTALLED TREES

DETAIL LANDSCAPE PLAN:
PUD/CORRIDOR SITE PLAN NUMBER: 146
DEVELOPMENT AREA: 3

NUMBER OF TREES REQUIRED PER GAS LINE NEGOTIATION:

REQUIRED	EXISTING	2 ORNAMENTALS = 1 TREE
169 TREES	154 TREES	144 ORNAMENTALS

154 TREES EXISTING
12 TREES SMALLER THAN 2" CALIPER
- 5 TREES NOT ON APPROVED VARIETY LIST (NON-CONFORMING)
157 TREES TOTAL PROVIDED

144 ORNAMENTALS EXISTING
-61 ORNAMENTALS SMALLER THAN APPROVED HEIGHT REQUIREMENTS
83 ORNAMENTS TOTAL PROVIDED

83/2=41 TREES

TOTAL TREES PROVIDED 157+41=178 TREES PROVIDED

LEGEND

DECIDUOUS TREE

ORNAMENTAL TREE NOT APPROVED HEIGHT

ORNAMENTAL TREE WITH APPROVED HEIGHT

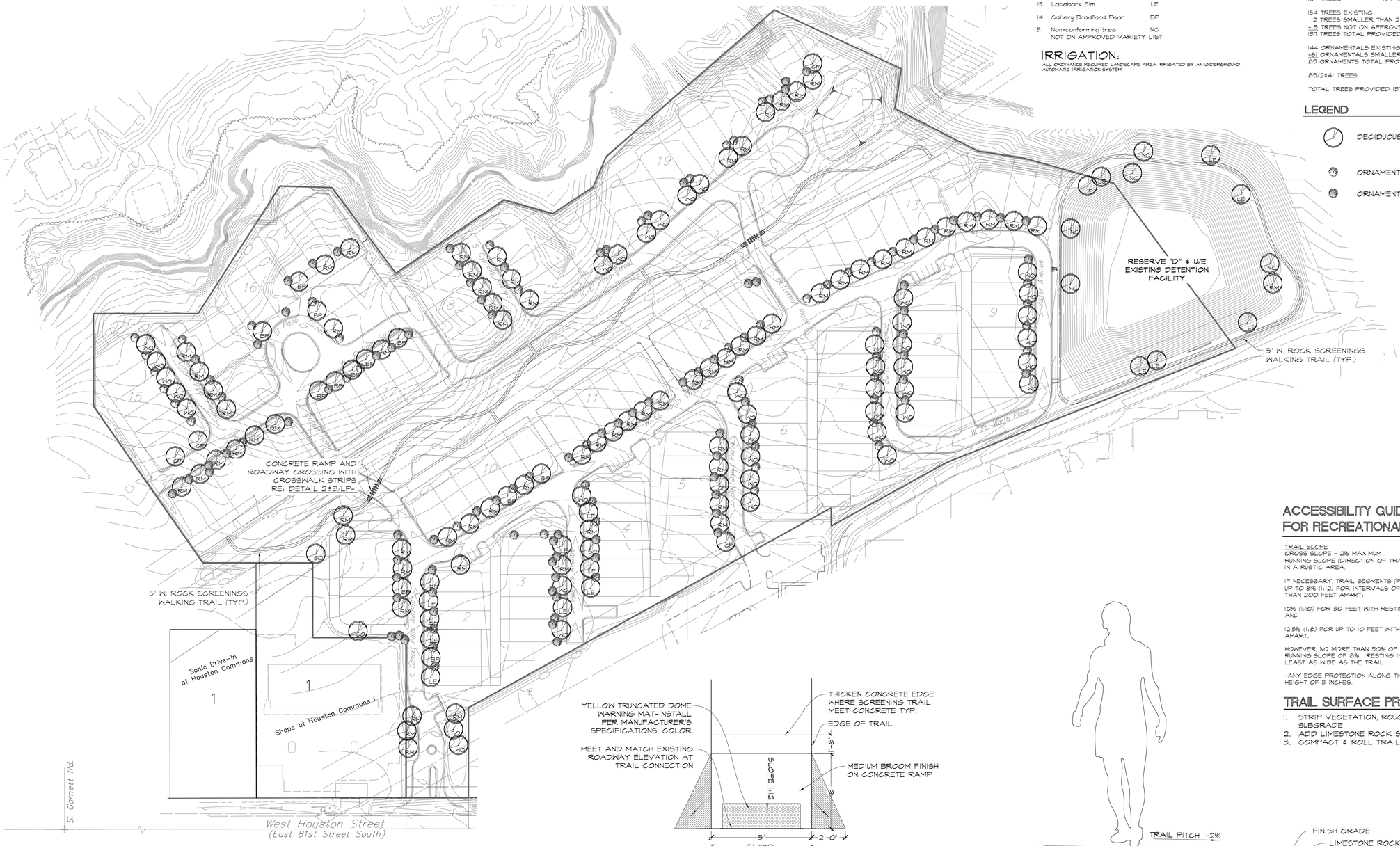

ACCESSIBILITY GUIDELINES FOR RECREATIONAL TRAILS

TRAIL SLOPE
CROSS SLOPE - 2% MAXIMUM
RUNNING SLOPE (DIRECTION OF TRAVEL) -- SHALL BE 5% OR LESS UNLESS TRAIL IS IN A RUSTIC AREA.

IF NECESSARY, TRAIL SEGMENTS (PARTS OF THE TRAIL) MAY BE:
UP TO 8% (1:12) FOR INTERVALS OF 200 FEET WITH RESTING INTERVALS NO MORE THAN 200 FEET APART;

10% (1:10) FOR 30 FEET WITH RESTING INTERVALS NO MORE THAN 30 FEET APART; AND

12.5% (1:8) FOR UP TO 10 FEET WITH RESTING INTERVALS NO MORE THAN 10 FEET APART.

HOWEVER, NO MORE THAN 30% OF THE TOTAL TRAIL LENGTH MAY EXCEED A RUNNING SLOPE OF 8%. RESTING INTERVALS SHALL BE 5 FEET BY 5 FEET OR AT LEAST AS WIDE AS THE TRAIL.

-ANY EDGE PROTECTION ALONG THE SIDE OF A TRAIL SHALL HAVE A MINIMUM HEIGHT OF 3 INCHES.

TRAIL SURFACE PREPARATION NOTES

1. STRIP VEGETATION, ROUGH GRADE, COMPACT SUBGRADE
2. ADD LIMESTONE ROCK SCREENINGS TO A 3" DEPTH
3. COMPACT & ROLL TRAIL SURFACE

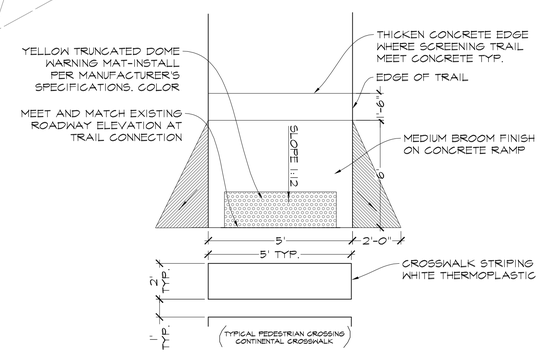

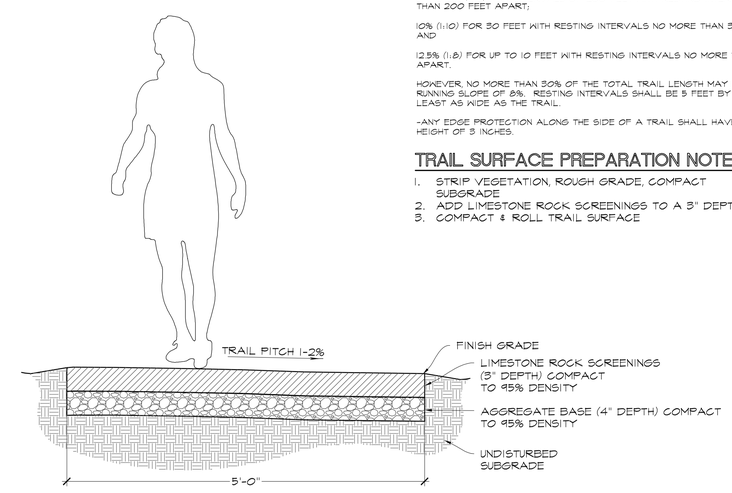

1 WALKING TRAIL LAYOUT - PLAN VIEW

SCALE 1"= 80'-0"

80 0 40 80 160

NORTH

2 TRAIL RAMP AND STRIPING

SCALE 1/4"= 1'-0"

3 TRAIL DETAIL - SECTION VIEW

SCALE 1/2"= 1'-0"

PDG
PLANNING DESIGN GROUP
LANDSCAPE ARCHITECTURE • RECREATIONAL DESIGN • LAND PLANNING
5314 S. YALE AVE., SUITE 510, TULSA, OK 74135
918.628.1255 918.628.1256 FAX
WWW.PLANNINGDESIGNGROUP.COM

OWNER:

CAPITAL HOMES RESIDENTIAL GROUP, LLC.

P.O. BOX 240
OWASSO, OKLAHOMA 74055
918.376.6536

PROJECT INFORMATION

NEAREST INTERSECTION:

E. 81ST STREET SOUTH &
S. DESERT PALM AVE.

PROJECT NO.	
DATE	9-18-2018
DRAWN BY	CHECKED BY
CC	JC

FOREST CREEK PATIO HOMES
BROKEN ARROW, OK

ISSUE/ REVISIONS

7-17-2018	REVISED TRAIL PLAN

WALKING TRAIL LAYOUT PLAN

LP-1