SURVEY CONTROL DATA

1. HORIZONTAL CONTROL MONUMENTS
   NORTHEAST QUARTER (NE/4) OF SECTION 9
2. BASIS OF BEARING:
   GRID NORTH AS ESTABLISHED BY OKLAHOMA STATE PLANE SYSTEM, NAD83(2011)
3. VERTICAL CONTROLS (BM):
   NAVD 88
4. SECTION NUMERICAL DESCRIPTION (S-T-R):
   SECTION 9, T-17-N, R-14-E

BEFORE YOU DIG! CALL OKIE 1-800-522-6543

UTILITIES LOCATION SHOWN ON PLAN AND PROFILE WERE OBTAINED FROM INFORMATION PROVIDED BY UTILITY SYSTEM OWNER IN CONJUNCTION WITH EXISTING PHYSICAL FEATURES VISIBLE AT THE TIME OF THE TOPOGRAPHIC SURVEY. LOCATIONS MUST BE VERIFIED BY THE CONTRACTOR PRIOR TO CONSTRUCTION.

UTILITY CONTACTS

CITY OF BROKEN ARROW, OKLAHOMA, E&C UTILITY COORDINATOR, GARY MCCOLPIN 485 N. POPLAR AVE. BROKEN ARROW, OKLAHOMA 74012 (539) 357-1612	CITY OF BROKEN ARROW, OKLAHOMA WATER & SEWER, TIMOTHY ROBINS, P.E. 485 N. POPLAR AVE. BROKEN ARROW, OKLAHOMA 74012 (918) 259-7000 EXT. 3000
CITY OF BROKEN ARROW, OKLAHOMA STREETS/STORMWATER, TIM WILSON 485 N. POPLAR AVE. BROKEN ARROW, OKLAHOMA 74012 (918) 259-7000 EXT. 5200	OKLAHOMA NATURAL GAS (GOV'T RELOCATIONS) ATTN.: JAMES CANTRELL 5848 EAST 15TH STREET TULSA, OKLAHOMA 74112 (918) 640-5300 (CELL) JAMES.CANTRELL@ONEGAS.COM
COX COMMUNICATIONS ATTN.: LAND USE & COMPLIANCE 11811 E. 51ST STREET TULSA, OK 74146 (405) 406-9894 (WORK),(833) 850-0590 TULROW@COX.NET	OKLAHOMA NATURAL GAS (EXISTING CONST.) ATTN.: ZACHARY WILMOTT 5848 EAST 15TH STREET TULSA, OKLAHOMA 74112 (918) 230-2612 (CELL) ZACHARY.WILMOTT@ONEGAS.COM
KINETIC FIBER ATTN.: RANDY MCCORKLE 11200 S. 225TH E. AVE. BROKEN ARROW, OKLAHOMA 74012 (918) 515-1903 (WORK) (918) 261-2918 (CELL)	AEP / PSO ATTN.: JOSEPH CHEBAIBAI 5223 S GARNETT ROAD TULSA, OK 74149 (918) 232-4571 (CELL) (918) 250-6249 (WORK)
METRONET COMMUNICATIONS ATTN.: EMILY KIEFFNER 1117 E. LOUISVILLE ST. BROKEN ARROW, OKLAHOMA 74012 (812) 639-4426 (CELL)	AT&T ATTN.: ALFORD NICHOLS 509 S. DETROIT AVE. TULSA, OK 74120 (539) 444-1069 (OFFICE) (918) 607-7028 (CELL)

CONVENTIONAL SYMBOLS

—— - - —— - - ——	SECTION LINES
————	PROPOSED ROAD
R/W	RIGHT-OF-WAY LINES – NEW
PRES. R/W	RIGHT-OF-WAY LINES – EXISTING
——X——	FENCES
——OE——	OVERHEAD ELECTRIC LINES
——OT——	OVERHEAD TELEPHONE LINES
——SS——	SANITARY SEWERS
——G——	GAS LINES
——W——	WATER LINES
——UT——	UNDERGROUND TELEPHONE LINES
——CTV——	CABLE TELEVISION LINES
——STM——	STORM SEWER
——UCT——	UNDERGROUND CABLE TELEVISION LINES
——UE——	UNDERGROUND ELECTRIC

BROKEN ARROW
Where Opportunity lives

INDIAN SPRINGS

35.973294°, -95.815489°

PROJECT NUMBER 191713

R-14-E

W. JASPER ST. (E. 13ST ST. S.)

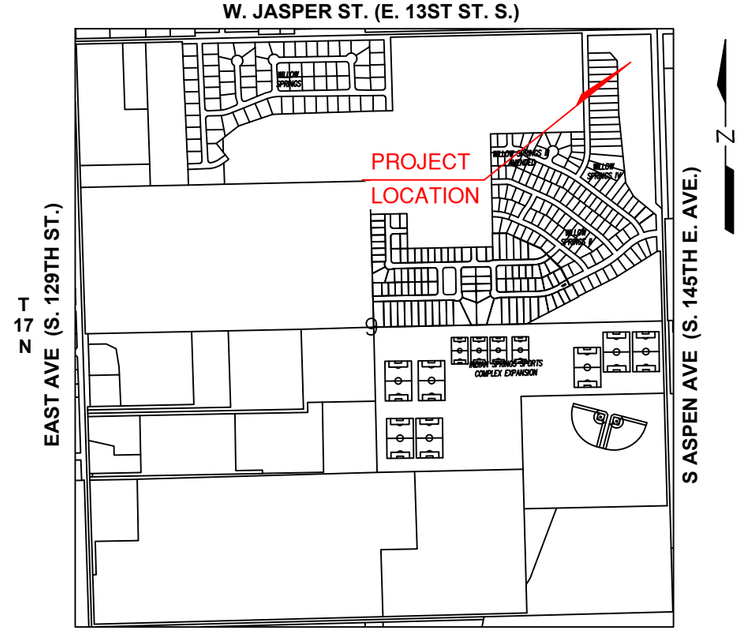

PROJECT LOCATION SECTION 9, T-17-N, R-14-E, TULSA COUNTY

ENGINEERING & CONSTRUCTION DEPARTMENT
485 NORTH POPLAR AVENUE
BROKEN ARROW, OK. 74012

CITY OF BROKEN ARROW STANDARD CONSTRUCTION SPECIFICATIONS, FEBRUARY 20, 2024, SHALL GOVERN ALL CONSTRUCTION AS SUPPLEMENTED BY OKLAHOMA STANDARD SPECIFICATION FOR HIGHWAY CONSTRUCTION, APPROVED BY THE DEPARTMENT OF TRANSPORTATION 2019.

INDEX OF SHEETS

DESCRIPTION	SHEET
TITLE SHEET	1
GENERAL NOTES & TOWER LOADING	2–3
SITE PLAN & SURVEYS	4–8
GROUNDNG PLAN & DETAILS	9–11
STRUCTURE DETAILS	12
H-FRAME & FENCE DETAILS	13
HAND HOLE INSTALLATION	14
ACCESS ROAD DETAILS	15
RF NOTES	16

BROKEN ARROW COUNCIL

MAYOR	DEBRA WIMPEE
VICE-MAYOR	JOHNNIE PARKS
WARD-2	LISA FORD
WARD-4	JUSTIN GREEN
WARD-3	DAVID PICKEL

BEST MANAGEMENT PRACTICES MANUAL:

REFER TO HTTPS://WWW.BROKENARROWOK.GOV/GOVERNMENT/PUBLIC-WORKS/ENGINEERING-CONSTRUCTION/CONSTRUCTION ACTIVITY BEST MANAGEMENT PRACTICES GUIDANCE MANUAL 2023

APPROVED

_____ DATE _____
MICHAEL L. SPURGEON
CITY MANAGER/ GENERAL MANAGER

RECOMMENDED FOR APPROVAL

_____ DATE _____
CHARLIE BRIGHT P.E.
DIRECTOR OF ENGINEERING & CONSTRUCTION

_____ DATE _____
TIM WILSON
DIRECTOR OF STREETS & STORMWATER

_____
LYNN R. MERRILL P.E.
ENGINEER OF RECORD

M:\Current\BROKEN_ARROW_from_client\TITLE SHEET.dwg, 3/12/2026 - 9:30 AM

SITE WORK GENERAL NOTES

1. The Contractor shall conduct his operations so as not to interfere with public or private utility authorities installing services on or near site. The Contractor is responsible for having all utilities located prior to commencing construction activities. Trenches on site, in public roads, right-of-ways, and on private property shall be excavated in such a manner that damage does not occur to an existing utility. The Contractor will be held responsible for all costs associated with damaging existing utilities, including but not limited to fines and repair costs. Open trenches will be barricaded per OSHA requirements.
2. All existing active sewer, water, gas, electric, and other utilities where encountered in the work, shall be protected at all times, and where required for the proper execution of the work, shall be relocated as directed by owner/contractor and or utilities.
3. All site work shall be as indicated on the drawings and in the project specifications.
4. If necessary, rubbish, stumps, debris, sticks, stones and other refuse shall be removed from the site and disposed of legally.
5. All existing inactive sewer, water, gas, electric and other utilities, which interfere with the execution of the work, shall be removed and/or capped, plugged or otherwise discontinued at points which will not interfere with the execution of the work, subject to the approval of contractor, owner and/or local utilities.
6. The Contractor shall provide site signage in accordance with the technical specification for site signage, if applicable.
7. The site shall be graded to cause surface water to flow away from the equipment shelter or equipment location and tower areas.
8. No fill or embankment material shall be placed on frozen ground. Frozen materials, snow or ice shall not be placed in any fill or embankment.
9. The sub grade shall be compacted and brought to a smooth uniform grade prior to finished surface application.
10. The areas of the owners property disturbed by the work and not covered by the tower equipment or driveway, shall be graded to a uniform slope, and stabilized to prevent erosion as specified in the project specifications.
11. Contractor shall minimize disturbance to existing site during construction. Erosion control measures, if required during construction, shall be in conformance with the local guidelines for erosion and sediment control.

CODES & STANDARDS

Contractor's work shall comply with all applicable national, state, and local codes as adopted by the local authority having jurisdiction (AHJ) for the location. The edition of the AHJ adopted codes and standards in effect on the date of contract award shall govern the design.

BUILDING CODE:
Contractor's work shall comply with the latest edition of International Building Code.

ELECTRICAL CODE:
National Fire Protection Association (NFPA) 70 - 2023, National Electrical Code

LIGHTNING PROTECTION CODE:
NFPA 780 - Lightning Protection Code, 2023

LOCAL CODES:
Uniform building, fire, electrical, plumbing, or mechanical codes adopted by the City of Broken Arrow, a recognized national code organization, or local amendments to those codes, as well as the Broken Arrow Code of Ordinances and all other codes and regulations of the City of Broken Arrow, state and federal governments

CONTRACTOR'S WORK SHALL COMPLY WITH THE LATEST EDITION OF THE FOLLOWING STANDARDS:

1. American Concrete Institute (ACI) 305.1-06, 306, 318-99
2. American Institute of Steel Construction (AISC), Manual of Steel Construction
3. Telecommunications Industry Association (TIA/EIA 222) Latest Edition, Structural Standard for Antenna Tower and Antenna Supporting Structures
4. Institute for Electrical and Electronics Engineers (IEEE) 81, Guide for Measuring Earth Resistivity, Ground Impedance and Earth Surface Potentials of a Grounding System IEEE 1000 (1999) Recommended Practice for Powering and Grounding Electronic Equipment
5. IEEE C62.41, Recommended Practices on Surge Voltages in Low Voltage AC Power Circuits for Location Category C3 and High System Exposure.
6. TIA 607 Commercial Building Grounding and Bonding Requirements for Telecommunications
7. Telcordia GR-63 Network Equipment-Building System (NEBS): Physical Protection
8. Telcordia GR-347 Central Office Power Wiring
9. Telcordia GR-1275 General Installation Requirements
10. Telcordia GR-1503 Coaxial Cable Connections
11. Fabricated steel materials shall be rated and hot dipped galvanized in accordance with ASTM Specifications 123, latest issue (2oz. per sq. ft. of surface)

CONCRETE AND ALL CONCRETE REINFORCEMENT STEEL SHALL CONFORM TO APPROPRIATE SPECIFICATIONS OF THE AMERICAN SOCIETY FOR TESTING MATERIALS (ASTM). C39/C39M-05e1, A615/615M-08a OR BETTER, A185/A185M-07 OR BETTER.

For any conflicts between sections of listed codes and standards regarding material, methods of construction, or other requirements, the most restrictive requirement shall govern. Where there is conflict between a general requirement and a specific requirement, the specific requirement shall govern.

DATE	REVISIONS

CONSTRUCTION NOTES

1. Field verification: Contractor shall field verify scope of work, new antenna platform location, if applicable, and antennas to be installed.
2. Coordination of work: Contractor shall coordinate RF work and procedures with Owner.
3. Ice Bridge: Contractor shall install new ice bridge(s) as shown on the drawings and provide all necessary hanger assemblies, supports, and building entry ports required to support and route cables from the equipment shelter/building to the new ice bridge and new tower.
4. Compound surfacing and access driveways: Gravel surfacing is permitted within the compound in areas of the compound fencing, proposed ground ring connections, or other disturbed areas, and shall be replaced to match the original condition (or as specified) by the Contractor if disturbed during construction. However, no gravel driveway or gravel surfacing will be permitted for access driveways; all access driveways shall be constructed of concrete to the lines, grades, and details shown on the drawings or as approved by the Owner. Any cuts in Mirafi fabric shall have a new Mirafi strap installed over the cut with an overlap of at least one foot on each side.
5. All work to be performed by the Contractor unless otherwise noted.
6. Painting / Galvanizing Repairs: Contractor to apply cold galvanized paint (ZRC Cold Galvanizing Compound or approved equivalent) or epoxy paint to any damaged, cut, welded, or exposed areas of the new tower structure during construction, to match the specified tower finish or as approved by the structure Owner. Photos of the ZRC cold galvanizing compound on-site and of the completed galvanizing repairs shall be submitted as part of the closeout package.

SITE NOTES

1. The minimum lowest elevation shall not be less than 12" above crown of the federal and/or 100 year flood elevation, whichever is higher. Contractor shall submit an elevation survey prior to placing equipment platform and a final survey upon completion of project. If required by local or state statutes.
2. Work outside of the property line included in this set of drawings shall be, but not be limited to, the site driveway and utility connections.
3. Contractor and sub-contractors shall verify all utility service connection locations prior to submittal of price. It is recommended that the contractor visit the site and verify all dimensions and notes before submitting price and proceeding with work.
4. Contractor shall reference any available geotechnical report for recommended excavation, backfill, and/or earth fill procedures. If no geotechnical report is provided or available for the site, Contractor shall notify the Owner and/or Engineer prior to commencing earthwork and shall follow industry-standard practices for the observed soil conditions, or as otherwise directed by the Owner/Engineer.
5. Contractor is responsible for all safety compliance's and safety of personnel & subcontractors.

GENERAL NOTES

1. For the purpose of construction, the following definitions shall apply:
2. All materials furnished and installed shall be in strict accordance with all applicable codes, regulations and ordinances. Contractor shall issue all appropriate notices and comply with all laws, ordinances, rules, regulations, and lawful orders of any public authority regarding the performance of the work.
3. All work carried out shall comply with all applicable municipal and utility company specifications and local jurisdictional codes, ordinances and applicable regulations.
4. Drawings are to scale unless otherwise indicated (e.g., labeled "NOT TO SCALE" or "SCHEMATIC"). Non-scaled drawings are provided for general arrangement and outline purposes only.
5. Unless noted otherwise, the work shall include furnishing materials, equipment, appurtenances, and labor necessary to complete all installations as indicated on the drawings.
6. The Contractor shall install all equipment and materials in accordance with the manufacturer's recommendations.
7. If the equipment cannot be installed as depicted on the drawings, Contractor shall propose an alternate installation arrangement for approval by the Owner and the Engineer of Record (EOR) prior to proceeding.
8. The Contractor shall be responsible at all times for keeping the premises, including access roads, free from excess waste materials and trash. Upon completion of the site work, and prior to final acceptance by the Owner, the Contractor shall remove all such materials and trash to a proper landfill site as designated by the local jurisdiction. Spare hardware removed shall be returned to the Owner's designated location.
9. Construction shall comply with Owner specifications for construction of sites.
10. Contractor shall verify all existing dimensions and conditions prior to commencing any work. All dimensions of existing construction shown on the drawing must be verified. Contractor shall notify the Owner of any discrepancies prior to ordering material or proceeding with construction.
11. All safety precautions must be taken when working around high levels of electromagnetic radiation. Equipment should be shutdown prior to performing any work that could expose the workers to danger. Personal RF exposure monitors are to be worn to alert workers of any dangerous exposure levels.
12. Equipment Calibration : All measuring devices such as transits, meters and RF test equipment shall be in proper calibration. Written confirmation from a certified laboratory that such instruments have been calibrated within the prior 6 month period before erection is to commence may be required by the Owner. At least one transit shall be present and utilized throughout the erection process.
13. The Contractor shall ensure that State and Local regulations are complied with in regard to noise levels produced by his or his Sub-contractor's equipment or methods of construction. The Contractor shall also ensure that his work hours comply with any local "quiet" ordinances and that his construction schedule takes into account any impact these quiet ordinances will have.
14. It is the contractors responsibility to review and understand all items within these drawings and contract specifications.

DRAFT WITHOUT STAMP

CITY OF BROKEN ARROW
Where opportunity lives

MRL COMMUNICATIONS ENGINEERS
525 CENTRAL PARK DRIVE SUITE 300
OKLAHOMA CITY, OK 73105 | (405)842-2405 | www.mrleng.com

N W E S
0 50 100 150

INDIAN SPRINGS
35.973294°, -95.815489°

GENERAL NOTES

PROFILE SCALE:	DESIGN	DATE	DRAFTED	DATE
HORZ. -	JA	03/26	NW	03/26
VERT. -	REVIEWED	DATE	APPROVED	DATE
	LM	03/26	LM	03/26
DRAWING NAME: N1	SHEET 2 OF 16		PROJECT NO. 250527	

M:\Current\BROKEN_ARROW\SITE_DRAWINGS\INDIAN_SPRINGS_BA_TITLEBLOCKS.dwg, 3/12/2026 - 9:30 AM

SAFETY NOTES

Contractor shall provide safety training for the working crew. Daily toolbox talks will be conducted covering topics such as a) Fall Protection, b) Confined Space, c) Electrical Safety, d)Trenching and Excavating, e) Hoist Safety, f) Crane Safety.

OSHA/NATE PARTNERSHIP:

PREPLANNING AND JOB HAZARD ANALYSIS REQUIREMENTS:

- An effective safety and health program shall be implemented on the job site
- A competent person, responsible for safety and health activities shall be designated for on site activities
- Training for 100% fall protection over 6' shall be completed for all exposed employees prior to construction and written certification shall be maintained
- Each individual having received training shall be personally identified
- The completion date for the training shall be documented on each training record
- All employees' training records shall be readily accessible for inspection purposes
- Inspections of the following equipment shall be performed every time it is placed into use:
  - All personal protective equipment
  - Fall protection systems including fall restraint, arrest and positioning device systems
  - All hand tools and electrical equipment
  - Rigging equipment
  - Tag lines

NOTE: It is required that a written validation of inspection shall be maintained at the job site and that a tagging system is implemented for equipment taken out-of-service.

- Location(s) where high-voltage lines and other electrical hazards have been identified and marked
- Electrical service provider has been notified prior to the start of work (if needed)
- Site specific briefing notifying employees of identified hazards and means of control/ elimination has been performed
- Emergency procedures have been determined and implemented prior to the start of work
- Personnel trained in first aid and CPR have been identified
- Site specific emergency rescue procedures have been developed and documented
- All applicable warning and danger signs have been posted and maintained on the job site
- All crew members are provided maps or address to nearest hospital
- All personnel are prohibited from 'Riding the equipment lift' - NO EXCEPTIONS

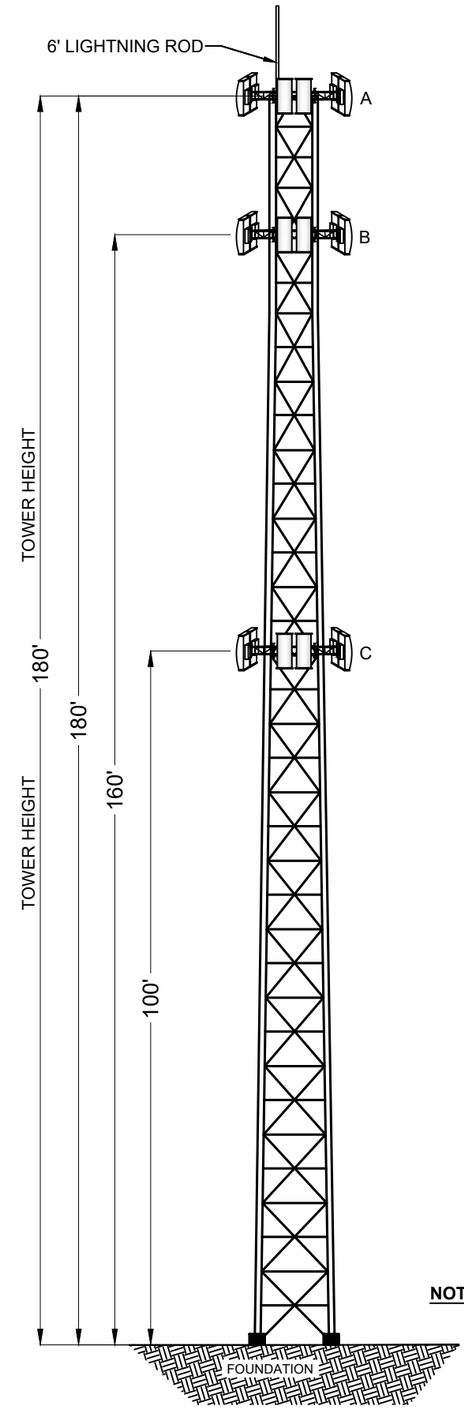

SELF-SUPPORT TOWER
LOADING DESIGN

PROPOSED NEW LOADING:

A. THREE (3) 10' SECTOR MOUNTS (180')
ONE (1) 6' LIGHTNING ROD
SIX (6) 8' X 1' PANEL ANTENNAS
SIX (6) REMOTE RADIO HEADS
ONE (1) RAYCAP
THREE (3) 7/8" HYBRID CABLES

B. THREE (3) 10' SECTOR MOUNTS (160')
SIX (6) 8' X 1' PANEL ANTENNAS
SIX (6) REMOTE RADIO HEADS
ONE (1) RAYCAP
THREE (3) 7/8" HYBRID CABLES

C. THREE (3) 10' SECTOR MOUNTS (100')
SIX (6) 8' X 1' PANEL ANTENNAS
SIX (6) REMOTE RADIO HEADS
ONE (1) RAYCAP
THREE (3) 7/8" HYBRID CABLES

NOTE: BROKEN ARROW WILL UTILIZE 20,000 SQUARE INCHES AT THE 100' C/L

NOTE: TOWER LOADING IS FOR DESIGN PURPOSES ONLY.

DATE	REVISIONS

DRAFT WITHOUT STAMP

CITY OF BROKEN ARROW
Where opportunity lives

MRL
COMMUNICATIONS ENGINEERS
525 CENTRAL PARK DRIVE SUITE 300
OKLAHOMA CITY, OK 73105 | (405)842-2405 | www.mrleng.com

N W E S
0 50 100 150

INDIAN SPRINGS
35.973294°, -95.815489°

NOTES & TOWER LOADING

PROFILE SCALE:	DESIGN	DATE	DRAFTED	DATE
HORZ. -	JA	03/26	NW	03/26
VERT. -	REVIEWED	DATE	APPROVED	DATE
	LM	03/26	LM	03/26
DRAWING NAME: N2	SHEET 3 OF 16		PROJECT NO. 250527	

M:\Current\BROKEN_ARROW\SITE_DRAWINGS\INDIAN_SPRINGS_BA_TITLEBLOCKS.dwg, 3/12/2026 - 9:30 AM

SITE PLAN (OVERVIEW)

NOTES:

1. LEASE AREA DIMENSIONS: 50'X50'
2. TOWER (180' SELF-SUPPORT TOWER)
3. ONE (1) SIX FOOT H-FRAME WITH 200 AMP SERVICE CENTER AND METER CAN
4. ONE (1) 48" X 30" X 24" TIER 22 HAND HOLE
5. DRIVEWAY DESIGN AND PAVEMENT: CONSTRUCT CONCRETE DRIVEWAY/ACCESS ROAD WITH PORTLAND CEMENT CONCRETE (CLASS BA1, MIN. 6" THICK) OR ASPHALTIC CONCRETE (MIN. 7.5" THICK) PER ENGINEERING DESIGN CRITERIA SEC. 6.7 AND ZONING ORDINANCE SEC. 22. MAX. GRADE: 10% WITHOUT DIRECTOR OF ENGINEERING APPROVAL.
6. DRIVEWAY LOCATION AND SPACING: INGRESS WIDTH ≤25' EXCL. CURB RETURNS PER ZONING ORDINANCE SEC. 107. MIN. DISTANCE FROM ARTERIAL/COLLECTOR INTERSECTION CENTERLINE: 150' FOR NON-RESIDENTIAL PER ENGINEERING DESIGN CRITERIA SEC. 6.3.4-6.3.5. NO INTERFERENCE WITH SIGHT TRIANGLES OR SIDEWALKS.
7. CURB CUT AND APPROACH: DESIGN CURB CUT TO HANDLE 100-YEAR STORM RUNOFF WITHOUT LEAVING ROADWAY PER ENGINEERING DESIGN CRITERIA SEC. 10.6.6. CONNECT SMOOTHLY TO EXISTING CURBS, PROFILE IN PLANS. IF ON A STATE HIGHWAY, COMPLY WITH ODOT REGULATIONS.
8. ADA-ACCESSIBLE SIDEWALK REPLACEMENT: COMPLY WITH ADA/PROWAG PER ENGINEERING DESIGN CRITERIA SEC. 6.2.8/6.7. MIN. WIDTH: 5' ON ARTERIAL/COMMERCIAL STREETS (18" FROM CURB FACE OR 2' FROM BACK FOR STRIPS). CONSTRUCT BEFORE FINAL INSPECTION; CONNECT ENTRANCES TO PUBLIC SIDEWALKS/TRANSIT. NO OBSTRUCTIONS >30" IN SIGHT TRIANGLES PER ZONING ORDINANCE SEC. 83.
9. 4' X 8' X 6" CONCRETE EQUIPMENT PAD AND 10' ICE BRIDGE (SEE SHEETS 11, 12)

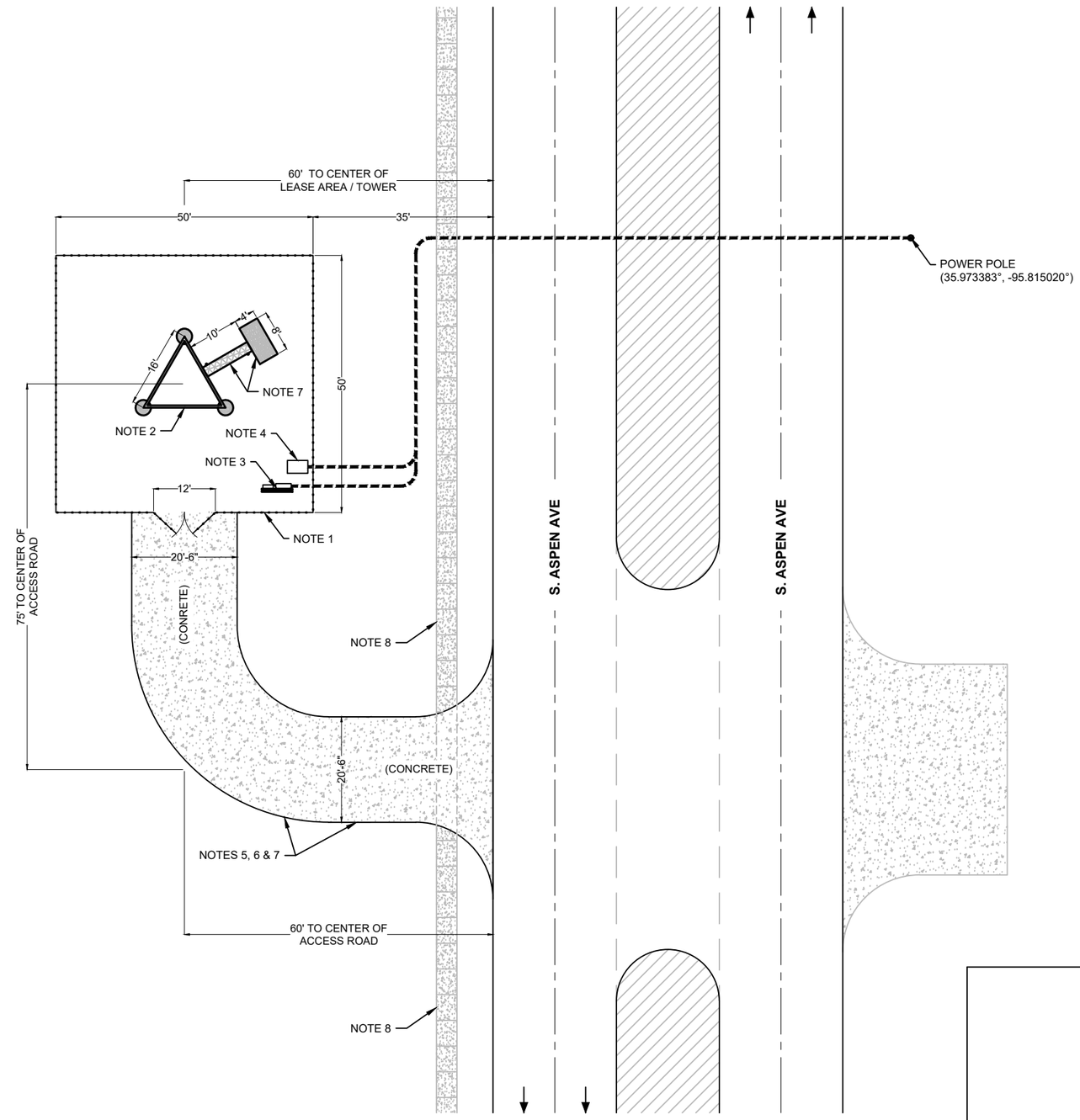

UNDERGROUND FACILITIES NOT SHOWN, MUST CALL LOCATOR SERVICE BEFORE DIGGING

811 Know what's below. Call before you dig.

DATE	REVISIONS

DRAFT WITHOUT STAMP

CITY OF BROKEN ARROW
Where opportunity lives

MRL COMMUNICATIONS ENGINEERS
525 CENTRAL PARK DRIVE SUITE 300
OKLAHOMA CITY, OK 73105 | (405)842-2405 | www.mrleng.com

N W E S
0 50 100 150

INDIAN SPRINGS
35.973294°, -95.815489°

SITE PLAN (OVERVIEW)

PROFILE SCALE:	DESIGN	DATE	DRAFTED	DATE
HORZ. -	JA	03/26	NW	03/26
VERT. -	REVIEWED	DATE	APPROVED	DATE
	LM	03/26	LM	03/26
DRAWING NAME: A1	SHEET 4 OF 16		PROJECT NO. 250527	

M:\Current\BROKEN_ARROW\SITE_DRAWINGS\INDIAN_SPRINGS_BA_TITLEBLOCKS.dwg, 3/12/2026 - 9:30 AM

SITE PLAN (DETAIL)

NOTES:

1. TOWER CENTER:
   LAT : 35.973294°
   LONG : -95.815489°
2. 50'X50' FENCED COMPOUND WITH TWO (2) 6' GATES
3. FIBER HAND HOLE
4. 6' POWER/TELCO H-FRAME (200-AMP SERVICE PANEL)
5. 4'X8'X6" CONCRETE EQUIPMENT PAD
6. 12" X 10' GALVANIZED ICE BRIDGE
7. ONE (1) 2" SCHEDULE 40 PVC POWER CONDUIT
   - CONTRACTOR SHALL STUB UP CONDUIT 12" ABOVE GRADE AT THE CONCRETE PAD
8. ONE (1) 3" SCHEDULE 40 PVC TELCO CONDUIT
   - CONTRACTOR SHALL STUB UP CONDUIT 12" ABOVE GRADE AT THE CONCRETE PAD

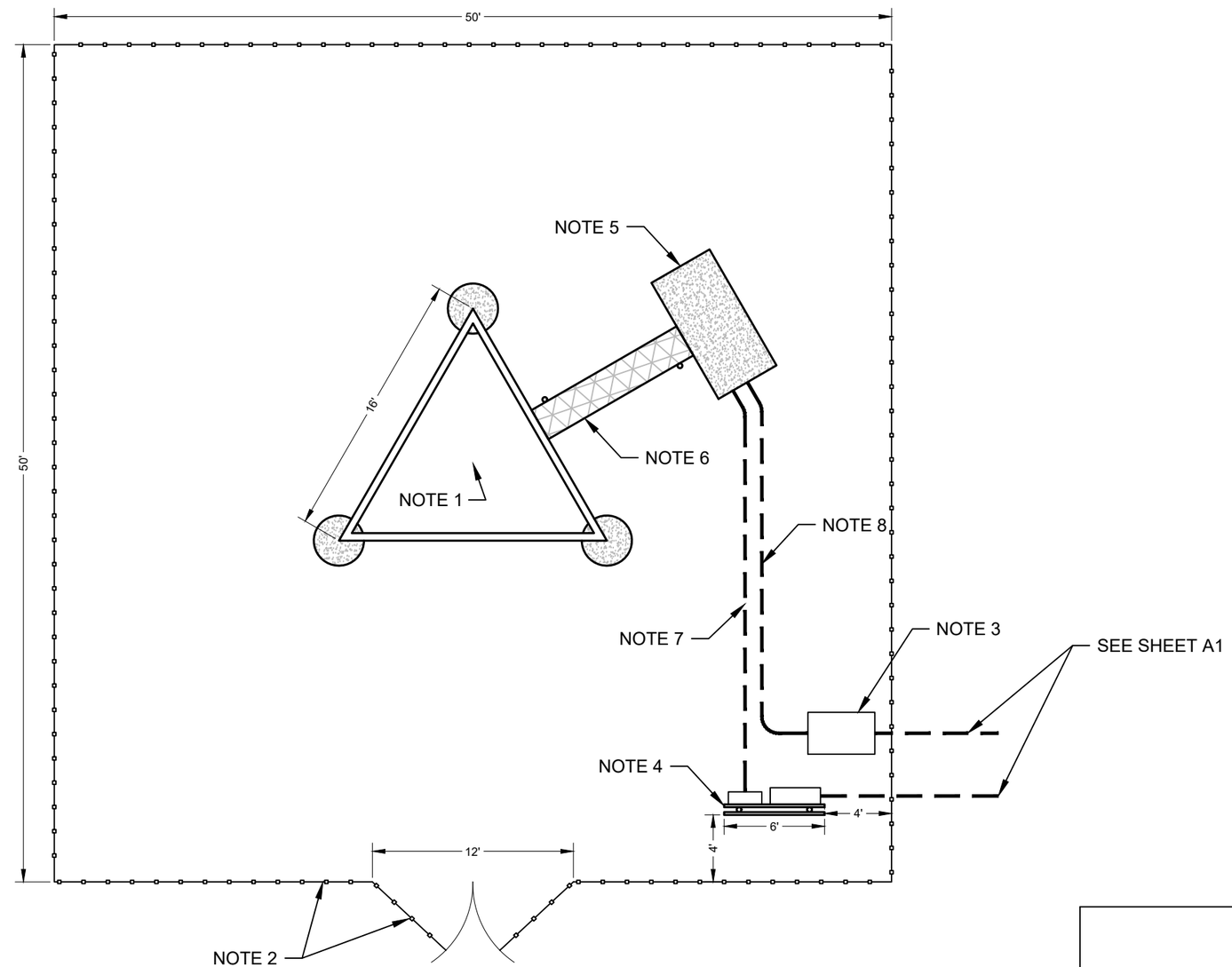

UNDERGROUND FACILITIES NOT SHOWN, MUST CALL LOCATOR SERVICE BEFORE DIGGING

811 Know what's below. Call before you dig.

DATE	REVISIONS

DRAFT WITHOUT STAMP

CITY OF BROKEN ARROW
Where opportunity lives

MRL
COMMUNICATIONS ENGINEERS
525 CENTRAL PARK DRIVE SUITE 300
OKLAHOMA CITY, OK 73105 | (405)842-2405 | www.mrleng.com

N W E S
0 50 100 150

INDIAN SPRINGS
35.973294°, -95.815489°

SITE PLAN (DETAIL)

PROFILE SCALE:	DESIGN	DATE	DRAFTED	DATE
HORZ. -	JA	03/26	NW	03/26
VERT. -	REVIEWED	DATE	APPROVED	DATE
	LM	03/26	LM	03/26
DRAWING NAME: A2	SHEET 5 OF 16		PROJECT NO. 250527	

M:\Current\BROKEN_ARROW\SITE_DRAWINGS\INDIAN_SPRINGS_BA_TITLEBLOCKS.dwg, 3/12/2026 - 9:30 AM

EXHIBIT "A"

PAGE 1 OF 2

PARCEL NO. 1
PROJECT NO. 250527

250527
Parcel No. 1

Underground Electrical Easement

An Underground Electrical Easement located in part of the Northeast quarter (NE/4) of Section Nine (9), Township Seventeen (17) North, Range Fourteen (14) East, Indian Meridian, Tulsa County, Oklahoma. Said Easement being more particularly described as follows:

Commencing at the Northeast corner of said Northeast quarter (NE/4);
Thence S 01°33'06" E on the East line of said Northeast quarter (NE/4) a distance of 167.52 feet;
Thence S 88°26'54" W a distance of 60.00 feet to a point on the West Existing Right of Way line of South Aspen Avenue, said point being the Point of Beginning;
Thence S 01°33'06" E on said West Existing Right of Way line a distance of 63.95 feet;
Thence S 88°26'54" W a distance of 25.00 feet;
Thence N 01°33'06" W a distance of 10.00 feet;
Thence N 88°26'54" E a distance of 5.00 feet;
Thence N 01°33'06" W a distance of 53.95 feet;
Thence N 88°26'54" E a distance of 20.00 feet to the Point of Beginning.

Containing 0.03 Acre (1329.10 Sq. Ft.), more or less.

Basis of Bearing:
Grid North as established by Oklahoma State Plane System, NAD 83 (2011), North zone

This Description was prepared by:
Michael D. Cain, PLS #2052
CEC Corporation, CA #32
11-05-2025

CEC
4555 W. MEMORIAL ROAD
OKLAHOMA CITY, OK 73142
(405) 753.4200
CA #32 EXP. 06-30-26

DATE: 11/06/2025
CEC PROJECT #: 250527
RADIO TOWER TOPO SURVEY
PARCEL No. 1
UNDERGROUND ELECTRICAL EASEMENT
EXHIBIT "A"
PROJECT NO. 250527

EXHIBIT "A"

PAGE 2 OF 2

PARCEL NO. 1
PROJECT NO. 250527

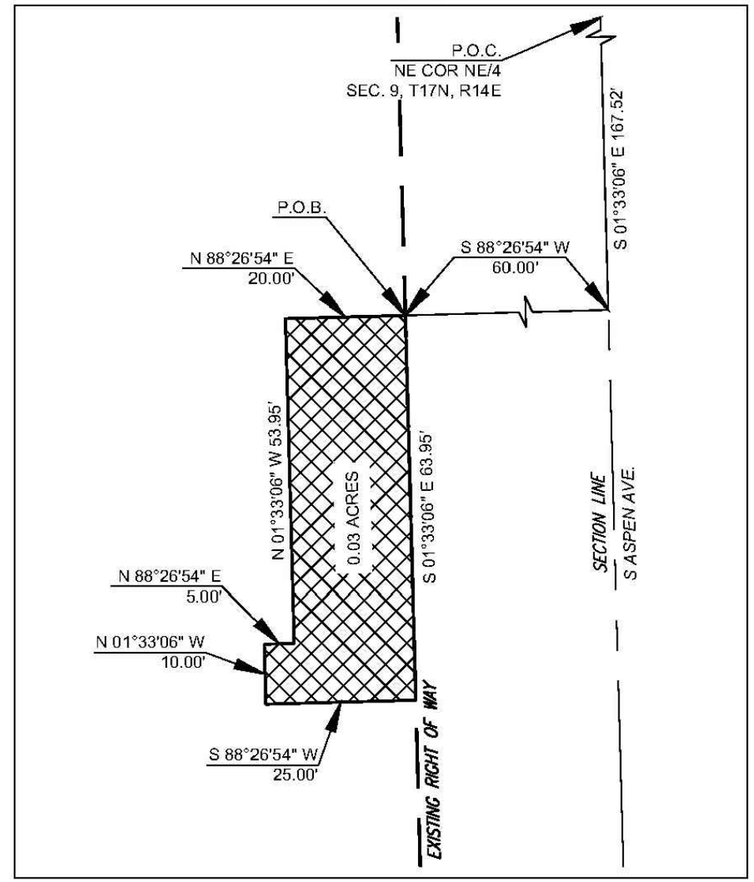

SURVEYOR'S CERTIFICATE

I, Michael D. Cain, Registered Professional Land Surveyor, on behalf of CEC Corporation, hereby state that the attached drawing represents the easement description, as shown hereon.

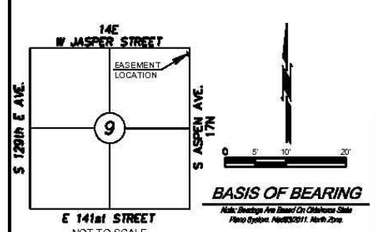

Michael D. Cain, PLS No. 2052
CEC Corporation
4555 W. Memorial Rd.
Oklahoma City, OK 73142

LICENSED PROFESSIONAL LAND SURVEYOR
MICHAEL D. CAIN
P.S. 2052
OKLAHOMA

CEC
4555 W. MEMORIAL ROAD
OKLAHOMA CITY, OK 73142
(405) 753.4200
CA #32 EXP. 06-30-26

DATE: 11/06/2025
CEC PROJECT #: 250527
RADIO TOWER TOPO SURVEY
PARCEL No. 1
UNDERGROUND ELECTRICAL EASEMENT
EXHIBIT "A"
PROJECT NO. 250527

DATE	REVISIONS

DRAFT WITHOUT STAMP

CITY OF BROKEN ARROW
Where opportunity lives

MRL COMMUNICATIONS ENGINEERS
525 CENTRAL PARK DRIVE SUITE 300
OKLAHOMA CITY, OK 73105 | (405)842-2405 | www.mrleng.com

N W E S
0 50 100 150

INDIAN SPRINGS
35.973294°, -95.815489°

SURVEY (EASEMENT)

PROFILE SCALE:	DESIGN	DATE	DRAFTED	DATE
HORZ. -	JA	03/26	NW	03/26
	REVIEWED	DATE	APPROVED	DATE
VERT. -	LM	03/26	LM	03/26
DRAWING NAME: A3-1	SHEET 6 OF 16		PROJECT NO. 250527	

M:\Current\BROKEN_ARROW\SITE_DRAWINGS\INDIAN_SPRINGS_BA_TITLEBLOCKS.dwg, 3/12/2026 - 9:30 AM

EXHIBIT "A"

PAGE 1 OF 2

PARCEL NO. 2
PROJECT NO. 250527

250527
Parcel No. 2

LEGAL DESCRIPTION

A tract of land lying in part of the Northeast quarter (NE/4) of Section Nine (9), Township Seventeen (17) North, Range Fourteen (14) East, Indian Meridian, Tulsa County, Oklahoma. Said tract being more particularly described as follows:

Commencing at the Northeast corner of said Northeast quarter (NE/4);
Thence S 01°33'06" E on the East line of said Northeast quarter (NE/4) a distance of 171.47 feet;
Thence S 88°26'54" W a distance of 80.00 feet to the Point of Beginning;
Thence S 01°33'06" E a distance of 50.00 feet;
Thence S 88°26'54" W a distance of 50.00 feet;
Thence N 01°33'06" W a distance of 50.00 feet;
Thence N 88°26'54" E a distance of 50.00 feet to the Point of Beginning.

Containing 0.06 Acre (2500.00 Sq. Ft.), more or less.

Basis of Bearing:
Grid North as established by Oklahoma State Plane System, NAD 83 (2011), North zone

This Description was prepared by:
Michael D. Cain, PLS #2052
CEC Corporation, CA #32
11-05-2025

CEC
4555 W. MEMORIAL ROAD
OKLAHOMA CITY, OK 73142
(405) 753.4200
CA #32 EXP. 06-30-26

DATE: 11/05/2025
CEC PROJECT #: 250527
RADIO TOWER TOPO SURVEY
PARCEL No. 2

LEASE
SURVEY
EXHIBIT "A"
PROJECT NO. 250527

EXHIBIT "A"

PAGE 2 OF 2

PARCEL NO. 2
PROJECT NO. 250527

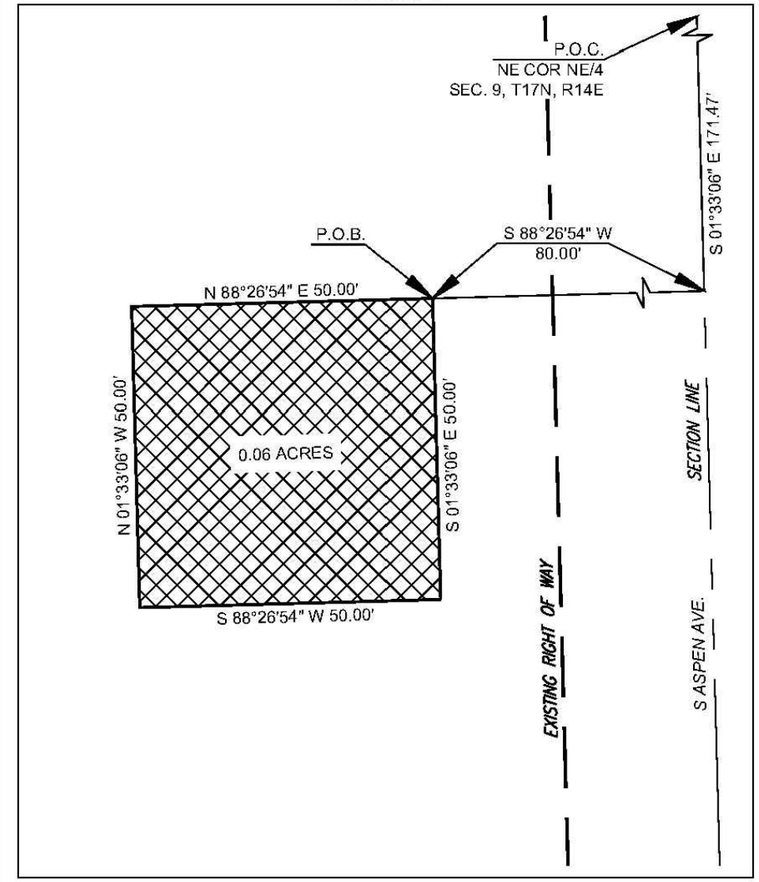

SURVEYOR'S CERTIFICATE

I, Michael D. Cain, Registered Professional Land Surveyor, on behalf of CEC Corporation, hereby state that the attached drawing represents the legal description, as shown hereon.

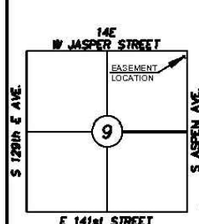

NOT TO SCALE

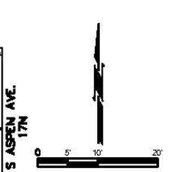

BASIS OF BEARING
Note: Bearings Are Based On Oklahoma State Plane System, Nad83(2011), North Zone.

Michael Cain

Michael D. Cain, PLS No. 2052
CEC Corporation
4555 W. Memorial Rd.
Oklahoma City, OK 73142

LICENSED PROFESSIONAL LAND SURVEYOR
MICHAEL D. CAIN
P.S. 2052
OKLAHOMA

CEC
4555 W. MEMORIAL ROAD
OKLAHOMA CITY, OK 73142
(405) 753.4200
CA #32 EXP. 06-30-26

DATE: 11/05/2025
CEC PROJECT #: 250527
RADIO TOWER TOPO SURVEY
PARCEL No. 2

LEASE
SURVEY
EXHIBIT "A"
PROJECT NO. 250527

DATE	REVISIONS

DRAFT WITHOUT STAMP

CITY OF BROKEN ARROW
Where opportunity lives

MRL
COMMUNICATIONS ENGINEERS
525 CENTRAL PARK DRIVE SUITE 300
OKLAHOMA CITY, OK 73105 | (405)842-2405 | www.mrleng.com

N W E S
0 50 100 150

INDIAN SPRINGS
35.973294°, -95.815489°

SURVEY (LEASE AREA)

PROFILE SCALE:	DESIGN	DATE	DRAFTED	DATE
HORZ. -	JA	03/26	NW	03/26
	REVIEWED	DATE	APPROVED	DATE
VERT. -	LM	03/26	LM	03/26
DRAWING NAME: A3-2	SHEET 7 OF 16		PROJECT NO. 250527	

M:\Current\BROKEN_ARROW\SITE_DRAWINGS\INDIAN_SPRINGS_BA_TITLEBLOCKS.dwg, 3/12/2026 - 9:30 AM

EXHIBIT "A"

PAGE 1 OF 2

PARCEL NO. 3
PROJECT NO. 250527

250527
Parcel No. 3

Roadway Access Easement

A Roadway Access Easement located in part of the Northeast quarter (NE/4) of Section Nine (9), Township Seventeen (17) North, Range Fourteen (14) East, Indian Meridian, Tulsa County, Oklahoma. Said Easement being more particularly described as follows:

Commencing at the Northeast corner of said Northeast quarter (NE/4);
Thence S 01°33'06" E on the East line of said Northeast quarter (NE/4) a distance of 256.47 feet;
Thence S 88°26'54" W a distance of 60.00 feet to a point on the West Existing Right of Way line of South Aspen Avenue, said point being the Point of Beginning;
Thence S 01°33'06" E on said West Existing Right of Way line a distance of 30.00 feet;
Thence S 88°26'54" W a distance of 36.42 feet;
Thence N 56°45'08" W a distance of 16.94 feet;
Thence N 36°21'03" W a distance of 16.94 feet;
Thence N 01°33'06" W a distance of 41.42 feet;
Thence N 88°26'54" E a distance of 30.00 feet;
Thence S 01°33'06" E a distance of 24.75 feet;
Thence S 46°33'06" E a distance of 14.49 feet;
Thence N 88°26'54" E a distance of 19.75 feet to the Point of Beginning.

Containing 0.06 Acre (2674.56 Sq. Ft.), more or less.

Basis of Bearing:
Grid North as established by Oklahoma State Plane System, NAD 83 (2011), North zone

This Description was prepared by:
Michael D. Cain, PLS #2052
CEC Corporation, CA #32
11-05-2025

CEC
4555 W. MEMORIAL ROAD
OKLAHOMA CITY, OK 73142
(405) 753.4200
CA #32 EXP. 06-30-26

DATE: 11/05/2025
CEC PROJECT #: 250527
RADIO TOWER TOPO SURVEY
PARCEL No. 3

ROADWAY ACCESS EASEMENT EXHIBIT "A"

PROJECT NO. 250527

DATE	REVISIONS

EXHIBIT "A"

PAGE 2 OF 2

PARCEL NO. 3
PROJECT NO. 250527

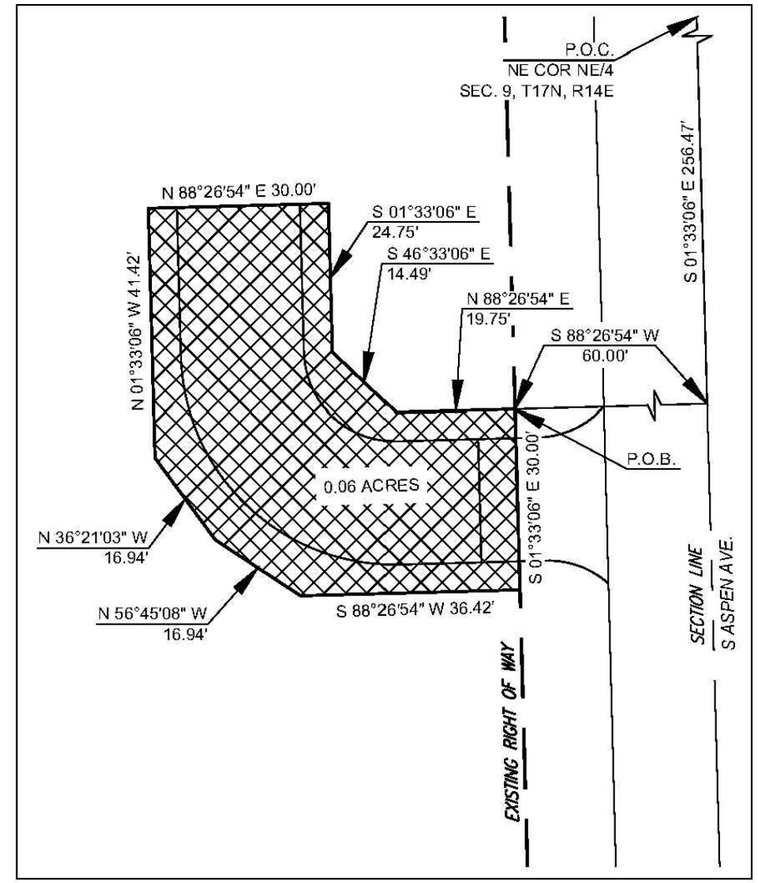

SURVEYOR'S CERTIFICATE

I, Michael D. Cain, Registered Professional Land Surveyor, on behalf of CEC Corporation, hereby state that the attached drawing represents the easement description, as shown hereon.

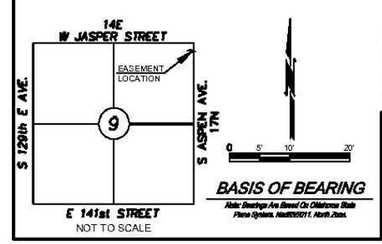

Michael Cain

Michael D. Cain, PLS No. 2052
CEC Corporation
4555 W. Memorial Rd.
Oklahoma City, OK 73142

LICENSED PROFESSIONAL LAND SURVEYOR
MICHAEL D. CAIN
P.S. 2052
OKLAHOMA

CEC
4555 W. MEMORIAL ROAD
OKLAHOMA CITY, OK 73142
(405) 753.4200
CA #32 EXP. 06-30-26

DATE: 11/05/2025
CEC PROJECT #: 250527
RADIO TOWER TOPO SURVEY
PARCEL No. 3

ROADWAY ACCESS EASEMENT EXHIBIT "A"

PROJECT NO. 250527

DRAFT WITHOUT STAMP

CITY OF BROKEN ARROW
Where opportunity lives

MRL
COMMUNICATIONS ENGINEERS
525 CENTRAL PARK DRIVE SUITE 300
OKLAHOMA CITY, OK 73105 | (405)842-2405 | www.mrleng.com

N W E S
0 50 100 150

INDIAN SPRINGS
35.973294°, -95.815489°

SITE SURVEY (EASEMENT)

PROFILE SCALE:	DESIGN	DATE	DRAFTED	DATE
HORZ. -	JA	03/26	NW	03/26
VERT. -	REVIEWED	DATE	APPROVED	DATE
	LM	03/26	LM	03/26
DRAWING NAME: A3-3	SHEET 8 OF 16		PROJECT NO. 250527	

M:\Current\BROKEN_ARROW\SITE_DRAWINGS\INDIAN_SPRINGS_BA_TITLEBLOCKS.dwg, 3/12/2026 - 9:30 AM

GROUNDING PLAN

- GROUND RING AND LEADS
- EXOTHERMIC WELD
- 10' XIT CHEMICAL GROUND ROD
- GROUND BAR
- MECHANICAL CLAMP
- INSPECTION HANDHOLE
- GROUND PIG TAILS 6' ABOVE GRADE

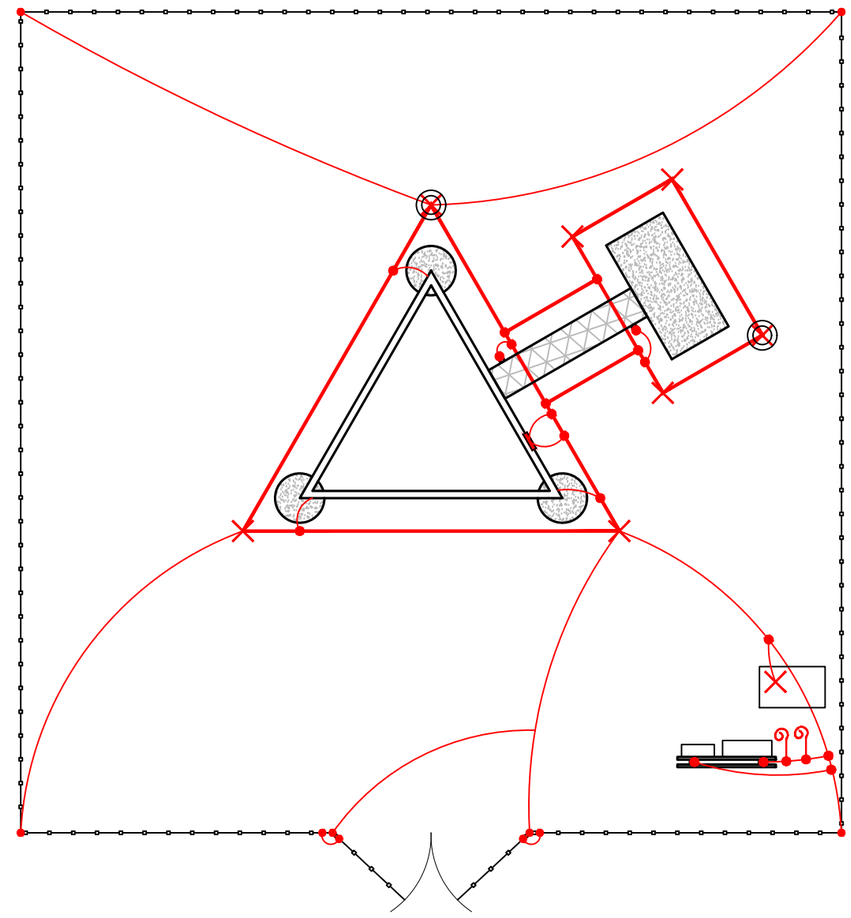

NOTES:

1. USE #2 AWG BARE SOLID TINNED COPPER WIRE FOR GROUND RING AND ALL ATTACHMENTS. MINIMUM BEND RADIUS SHALL NOT BE EXCEEDED
2. ALL LEGS OF TOWER, ICE BRIDGE, AND H-FRAME REQUIRE GROUNDING USING EXOTHERMIC WELDS.
3. ALL EQUIPMENT REQUIRES GROUNDING PER MANUFACTURER SPECIFICATIONS
3. GROUND TOWER GROUND BAR AT THE BOTTOM OF THE TOWER
4. BOND FENCE POSTS WITHIN 6' OF TOWER OR H-FRAME TO TOWER GROUND SYSTEM
5. PLACE INSPECTION HANDHOLE ON ONE TOWER AND ONE EQUIPMENT PAD GROUND RODS

UNDERGROUND FACILITIES NOT SHOWN, MUST CALL LOCATOR SERVICE BEFORE DIGGING

811 Know what's below. Call before you dig.

DATE	REVISIONS

DRAFT WITHOUT STAMP

CITY OF BROKEN ARROW
Where opportunity lives

MRL COMMUNICATIONS ENGINEERS
525 CENTRAL PARK DRIVE SUITE 300
OKLAHOMA CITY, OK 73105 | (405)842-2405 | www.mrleng.com

N W E S
0 50 100 150

INDIAN SPRINGS
35.973294°, -95.815489°

GROUNDING PLAN

PROFILE SCALE:	DESIGN	DATE	DRAFTED	DATE
HORZ. -	JA	03/26	NW	03/26
VERT. -	REVIEWED	DATE	APPROVED	DATE
	LM	03/26	LM	03/26
DRAWING NAME: B1	SHEET 9 OF 16		PROJECT NO. 250527	

M:\Current\BROKEN_ARROW\SITE_DRAWINGS\INDIAN_SPRINGS_BA_TITLEBLOCKS.dwg, 3/12/2026 - 9:30 AM

EXAMPLE SELF-SUPPORT TOWER

GROUNDING DETAIL

1. DUAL LUG GROUND BAR 4" x 12" x 1/4"
2. CITY OF BROKEN ARROW FUTURE 20,000 SQUARE INCHES AT THE 100' C/L

NOTE: DRAWING DOES NOT DEPICT ACTUAL INSTALLATION

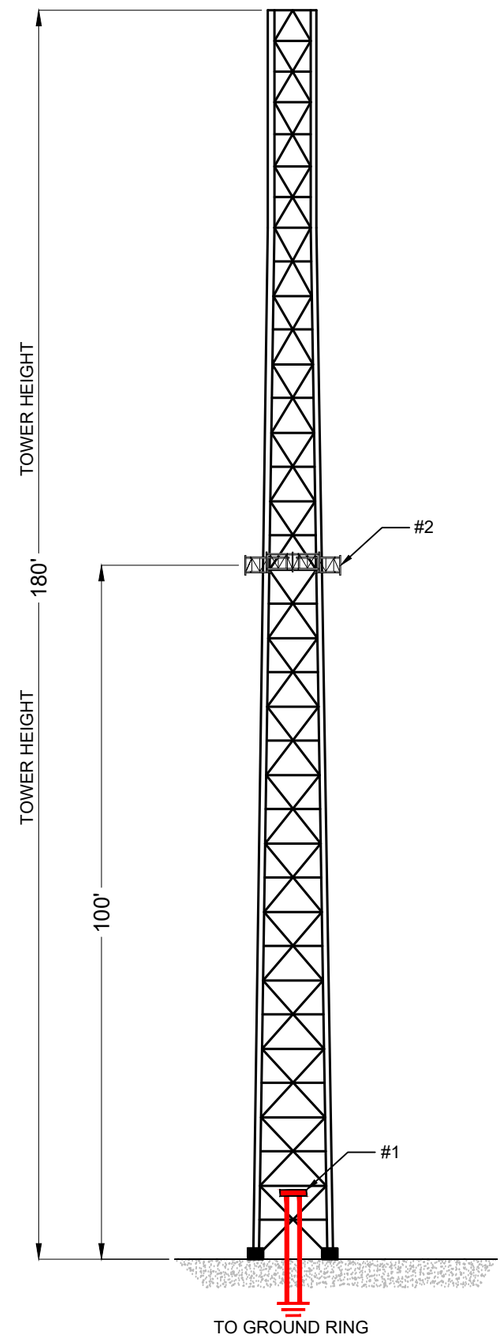

GROUNDING REQUIREMENTS

When Applicable:

1. The Contractor shall install the grounding system and lightning protection devices and shall verify (as designed and installed) and document compliance with the NEC (as adopted by the AHJ), the site-specific (UL, LPI, or NFPA) lightning protection code, and general compliance with Telcordia and ITA Grounding Standards.
2. All conductors shall be run in horizontal and vertical directions only, and as straight as possible to minimize the number of bends and curves. The minimum allowable bend is 12 inches.
3. All ground electrode systems (including telecommunication, radio, lightning protection, and AC power GES's) shall be bonded together, at or below grade, by two or more copper bonding conductors in accordance with the NEC.
4. The Contractor shall measure the ground resistance prior to backfilling the ground ring trenches and provide test results to the Owner to verify compliance with the grounding resistance measurement specifications. If poor soil resistivity or unusual site restrictions exist, chemically enhanced ground rods may be required per written approval of the Owner. The maximum resistance between any point on the ground system and a non-trivial reference ground shall be five (5) ohms or less. The “fall of potential” method with a Megger Earth Tester is recommended for this test.
5. Metal raceway shall not be used as the NEC required equipment ground conductor. Stranded copper conductors with green insulation, size in accordance with the NEC, shall be furnished and installed with the power circuits to equipment.
6. Each cabinet frame shall be directly connected to the ground ring with #2 AWG solid copper. All ground leads to be connected using UL listed two-hole, long barrel, electro tin plated compression lugs or exothermic welds.
7. Exothermic welds shall be used for all grounding connections below grade. Ice bridge bonding conductors shall be mechanically bonded to the bridge and bolted to the platform ground bar.
8. Approved antioxidant coatings (i.e., conductive gel or paste) shall be used on all compression and bolted ground connections.
9. Aluminum conductor or copper clad steel conductor shall not be used for grounding connections.
10. Miscellaneous electrical and non-electrical metal boxes, frames and supports shall be bonded to the ground ring, in accordance with the NEC.
11. Where applicable, metal conduit and tray shall be grounded and made electrically continuous with listed bonding fittings or by bonding across the discontinuity with #6 AWG copper wire and UL approved grounding type conduit clamps.
12. Ground conductors used in the facility ground and lightning protection systems shall not be routed through metallic objects that form a ring around the conductor, such as metallic conduits, metal support clips or sleeves (thereby causing “girdling” effects) through walls or floors. When it is required to be housed in conduit to meet code requirements or local conditions, non-metallic material such as PVC plastic conduit shall be used. Where use of metal conduit is unavoidable (e.g., non-metallic conduit prohibited by local code) the ground conductor shall be bonded to each end of the metal conduit.
13. Ground bars shall be polished using Brasso or other suitable copper polish to remove corrosion and discoloration prior to connecting lugs to the bar. Coat the bar lightly with Non-Oxidizing Compound or equal. Remove excess No-Ox after installation.
14. All ground connections shall employ 2-hole long barrel, electro tin-plated compression lugs.

ALL BELOW GRADE CONNECTIONS TO GROUND RING SHALL BE EXOTHERMIC WELD PG TYPE CONNECTIONS

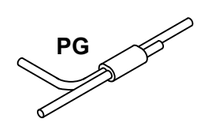

GROUNDING HARDWARE INSTALLATION

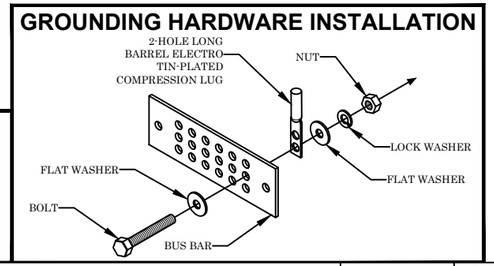

DATE	REVISIONS

DRAFT WITHOUT STAMP

CITY OF BROKEN ARROW
Where opportunity lives

MRL COMMUNICATIONS ENGINEERS
525 CENTRAL PARK DRIVE SUITE 300
OKLAHOMA CITY, OK 73105 | (405)842-2405 | www.mrleng.com

N W E S
0 50 100 150

INDIAN SPRINGS
35.973294°, -95.815489°

GROUNDING DETAILS I

PROFILE SCALE:	DESIGN	DATE	DRAFTED	DATE
HORZ. -	JA	03/26	NW	03/26
VERT. -	REVIEWED	DATE	APPROVED	DATE
	LM	03/26	LM	03/26
DRAWING NAME: B2	SHEET 10 OF 16		PROJECT NO. 250527	

M:\Current\BROKEN_ARROW\SITE_DRAWINGS\INDIAN_SPRINGS_BA_TITLEBLOCKS.dwg, 3/12/2026 - 9:30 AM

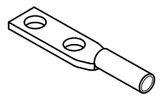

TWO HOLE LONG BARREL COMPRESSION LUGS
(ELECTROPLATED TINNED COPPER)
DETAIL #1

NOTE: USE WEATHERPROOF INSTRUCTIONS ON SHEET D1 (NOTE#9).

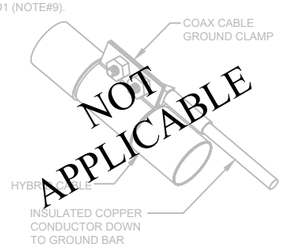

HYBRID GROUNDING EXAMPLE
DETAIL #2

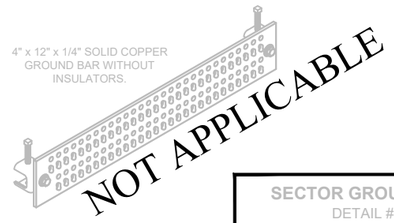

SECTOR GROUND BAR
DETAIL #3

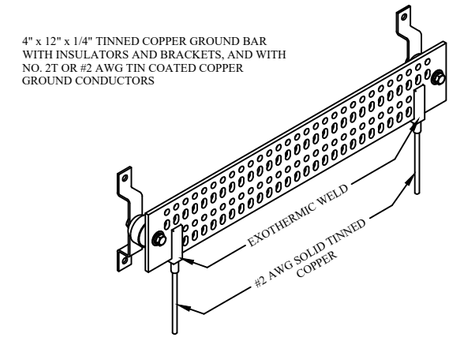

GROUND BAR EXAMPLE
DETAIL #4

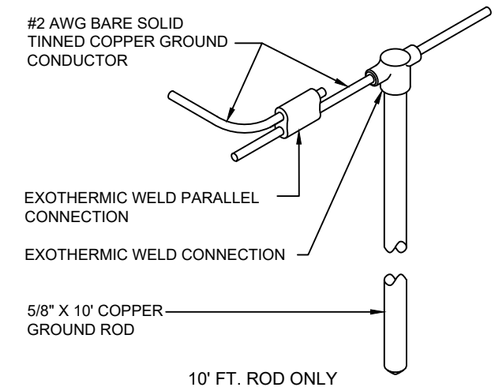

GROUND ROD EXAMPLE
DETAIL #5

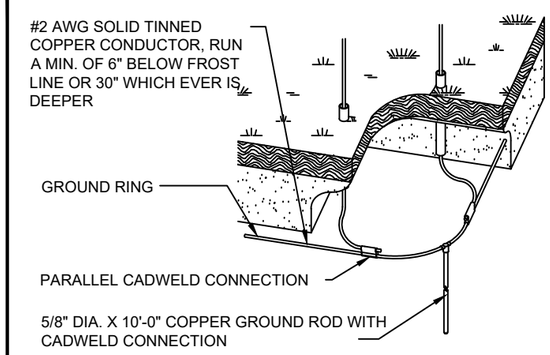

NOTE:
ALWAYS GUIDE LIGHTNING TO THE CLOSEST GROUND ROD

GROUND RING EXAMPLE
DETAIL #6

GROUNDING DETAILS EXAMPLE

LEGEND

- CABLE GROUND KIT (SEE DETAIL #2)
- EXOTHERMIC WELD
- TWO HOLE LONG BARREL COMPRESSION LUGS (SEE DETAIL #1)

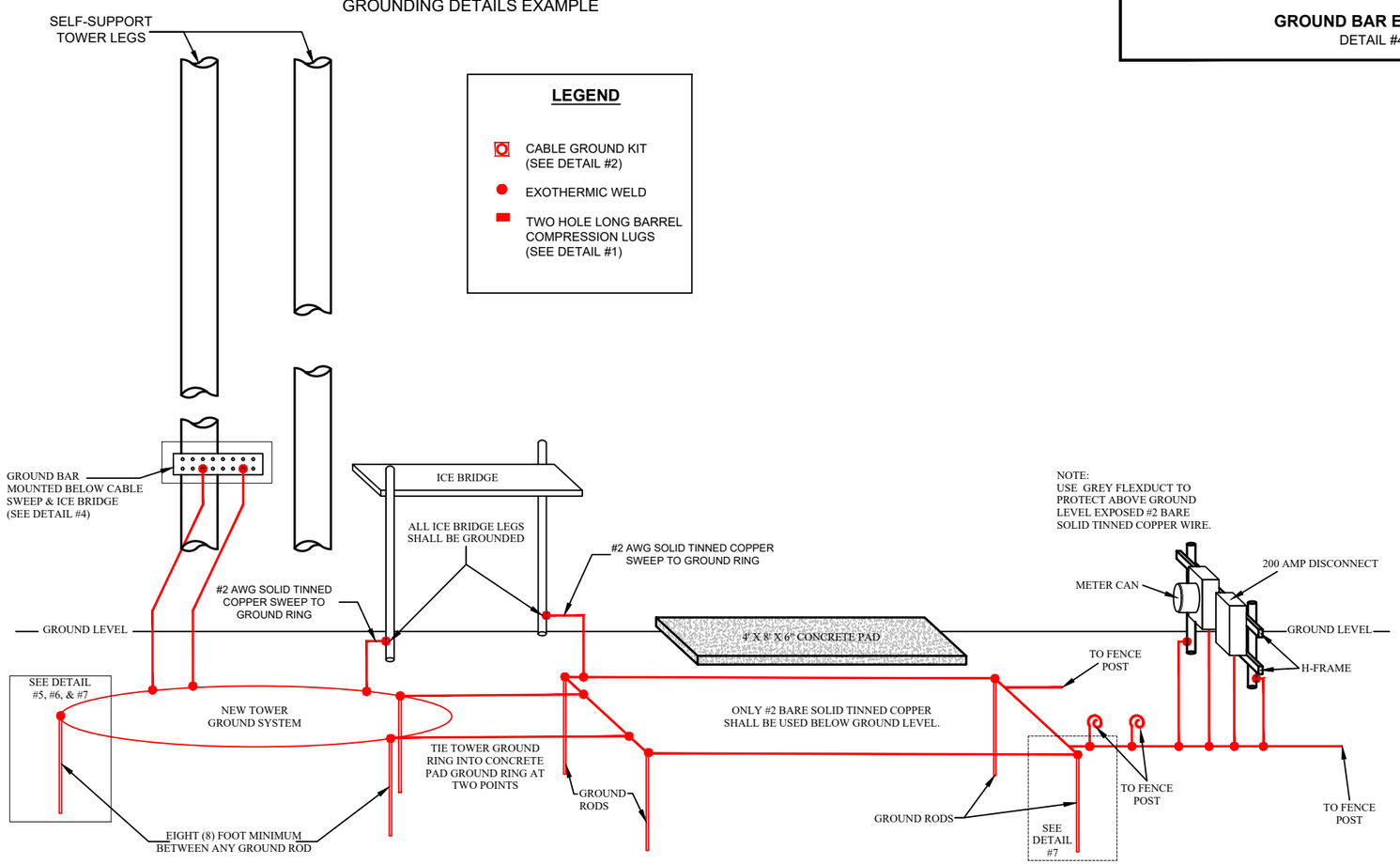

NOTE: GROUNDING EXAMPLE EQUIPMENT LOCATIONS ARE FOR REFERENCE ONLY.

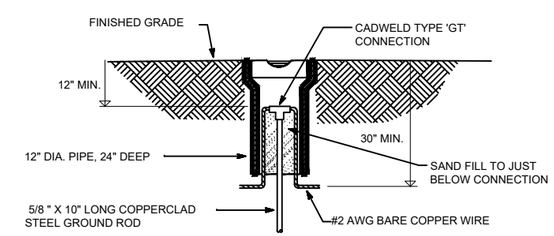

INSPECTION HANDHOLE
DETAIL #7

DATE	REVISIONS

DRAFT WITHOUT STAMP

CITY OF BROKEN ARROW
Where opportunity lives

MRL COMMUNICATIONS ENGINEERS
525 CENTRAL PARK DRIVE SUITE 300
OKLAHOMA CITY, OK 73105 | (405)842-2405 | www.mrleng.com

N W E S
0 50 100 150

INDIAN SPRINGS
35.973294°, -95.815489°

GROUNDING DETAILS II

PROFILE SCALE:	DESIGN	DATE	DRAFTED	DATE
HORZ. -	JA	03/26	NW	03/26
VERT. -	REVIEWED	DATE	APPROVED	DATE
	LM	03/26	LM	03/26
DRAWING NAME: B3	SHEET 11 OF 16		PROJECT NO. 250527	

M:\Current\BROKEN_ARROW\SITE_DRAWINGS\INDIAN_SPRINGS_BA_TITLEBLOCKS.dwg, 3/12/2026 - 9:30 AM

CEMENT PAD DETAIL
DETAIL #1

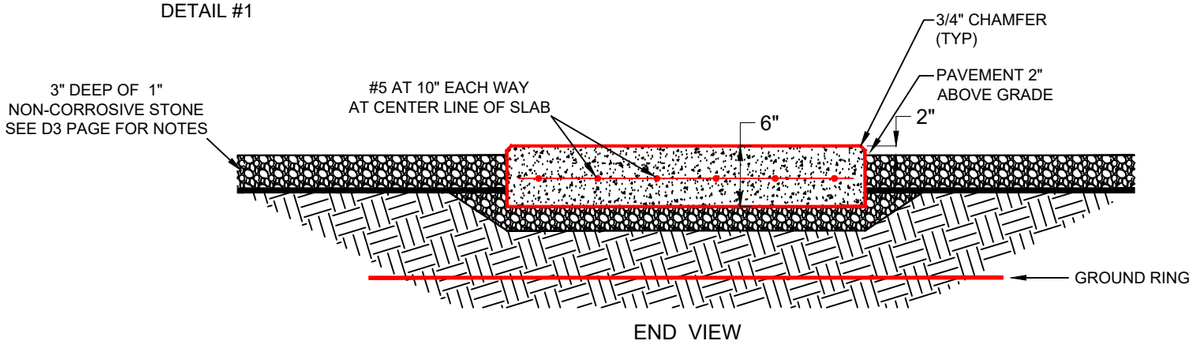

END VIEW

SITE SURFACING DETAIL
DETAIL #2

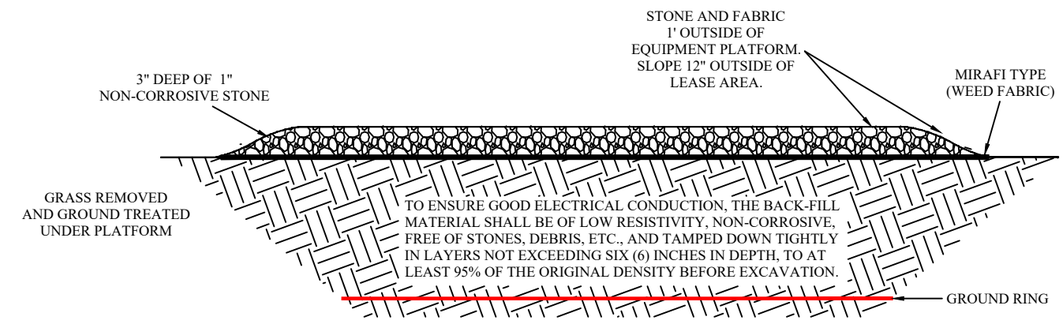

TRENCH PLAN FOR BURIED CONDUIT
DETAIL #3

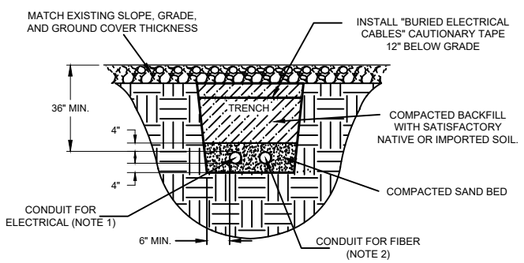

NOTE 1:
CONDUIT SIZE, QUANTITY AND SEPARATION DIMENSION TO BE VERIFIED WITH LOCAL UTILITY COMPANY REQUIREMENTS.
CONDUIT TYPE SHALL BE SCHEDULE 40 WITH WATER TIGHT JOINTS.

NOTE 2:
CONDUIT SHALL BE ONE (1) 4" ORANGE HDPE WITH WATER TIGHT JOINTS

EXAMPLE
GROUNDING DETAIL
FOR SELF-SUPPORT TOWER

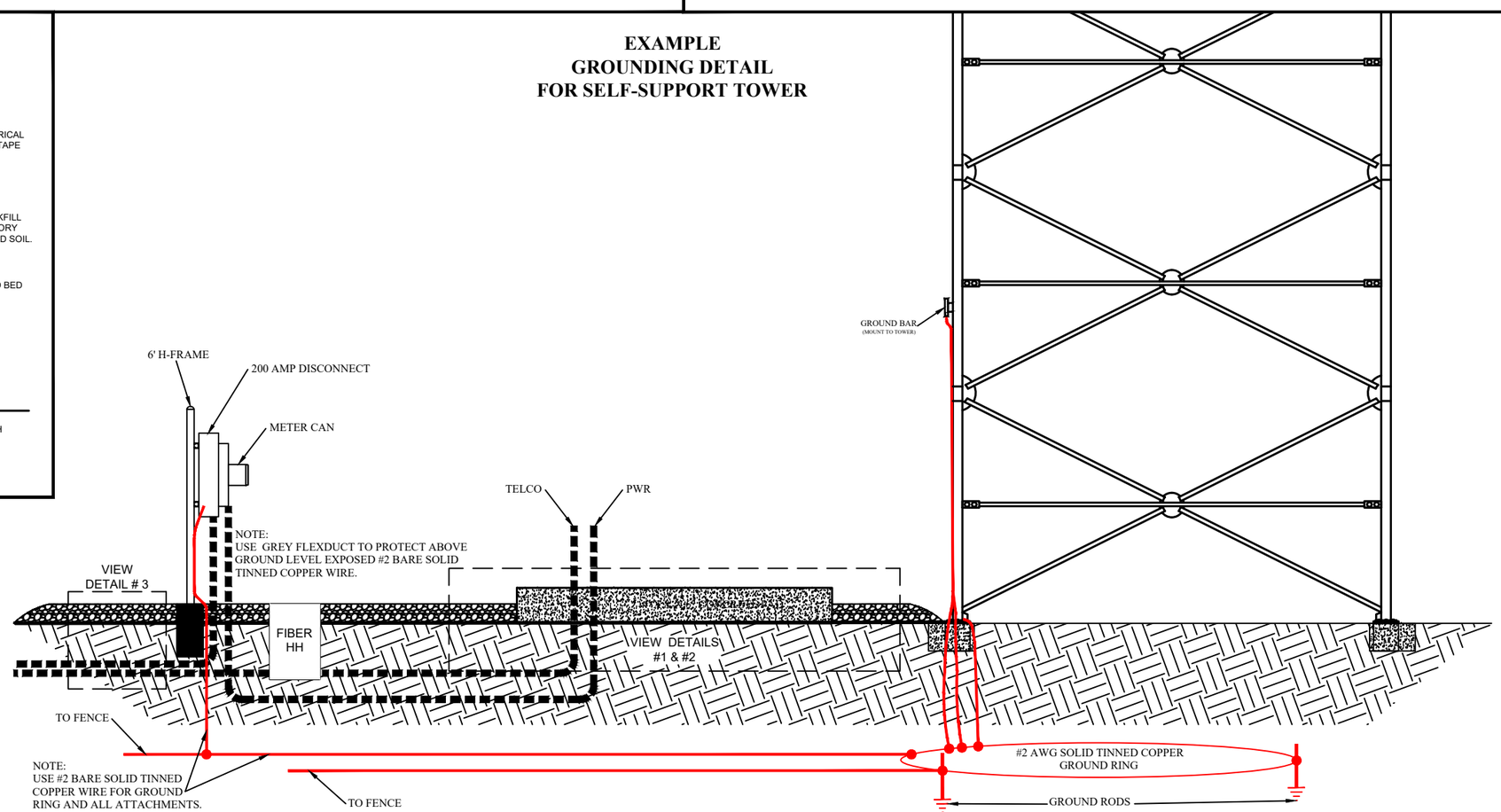

DATE	REVISIONS

DRAFT WITHOUT STAMP

CITY OF BROKEN ARROW
Where opportunity lives

MRL
COMMUNICATIONS ENGINEERS
525 CENTRAL PARK DRIVE SUITE 300
OKLAHOMA CITY, OK 73105 | (405)842-2405 | www.mrleng.com

N W E S
0 50 100 150

INDIAN SPRINGS
35.973294°, -95.815489°

STRUCTURE DETAILS

PROFILE SCALE:	DESIGN	DATE	DRAFTED	DATE
HORZ. -	JA	03/26	NW	03/26
VERT. -	REVIEWED	DATE	APPROVED	DATE
	LM	03/26	LM	03/26
DRAWING NAME: C1	SHEET 12 OF 16		PROJECT NO. 250527	

M:\Current\BROKEN_ARROW\SITE_DRAWINGS\INDIAN_SPRINGS_BA_TITLEBLOCKS.dwg, 3/12/2026 - 9:31 AM

EXAMPLE FENCE & GATE DETAIL

6' HIGH GATE / FENCE		FOOTINGS	NOTES:
LINE POST	2"	12" x 36"	1. ALL MATERIALS TO BE HOT DIP GALVANIZED
CORNER POST	3"	12" x 36"	
GATE POST	4"	12" x 36"	
TOP RAIL	1 ¼"	N/A	
FENCE TYPE			11 GAUGE

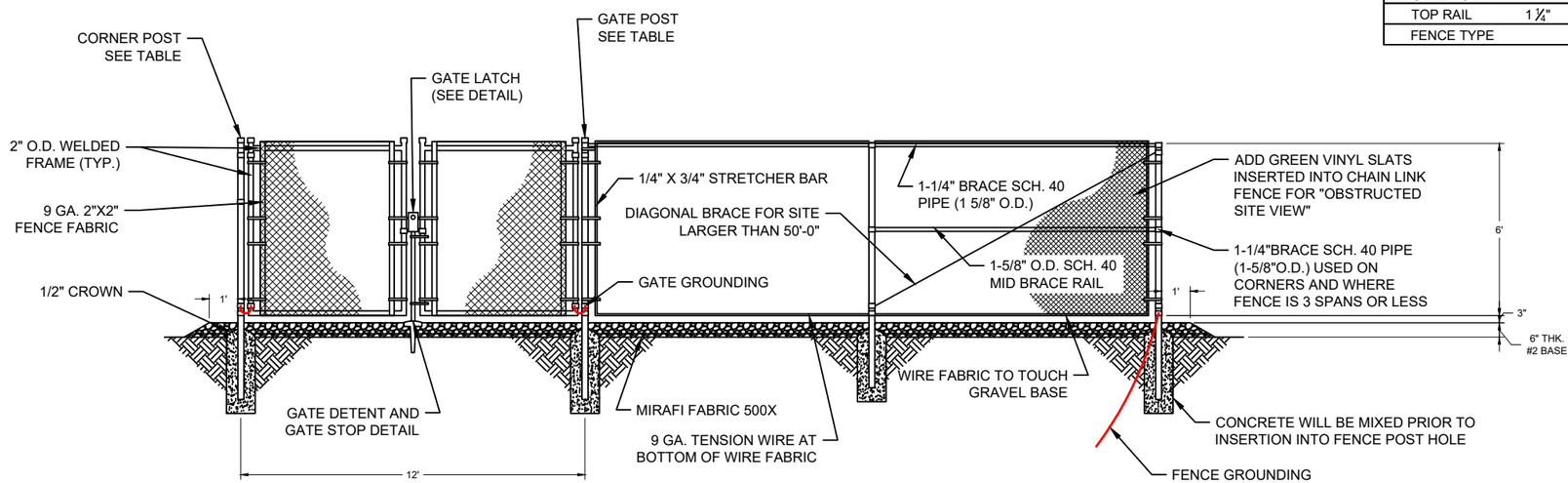

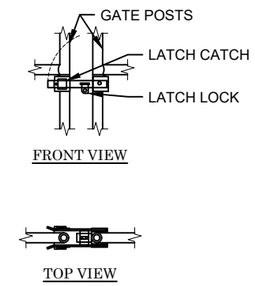

EXAMPLE GATE LATCH DETAIL

H-FRAME AND POWER SERVICE & DISCONNECT
120/240 200 AMP

1. 6' POWER H-FRAME
   - POST (2) 3-1/2" OD X 10'6" (FOOTING 12"X36")
   - CHANNEL STRUT (3) 5' PIECES
   - POST CAP (2) PIECES
   - SADDLE NUTS (6) PIECES
2. SCHEDULE 40 PVC CONDUIT TO TERMINATE TO PSO (SEE SHEET A1 FOR ROUTING DETAIL; SEE SHEET C1 DETAIL #3)
3. 2" SCHEDULE 40 PVC CONDUIT TO STUB-UP AT PAD
4. 3" GALVANIZED SLEEVE

ALL MATERIALS TO BE HOT DIP GALVANIZED.

***ALL WORK SHALL BE COMPLETED BY A LICENSED ELECTRICIAN**

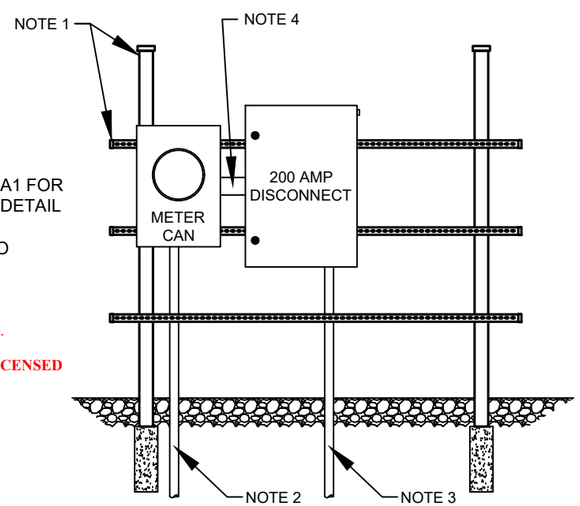

*** CONDUCTORS WILL BE INSTALLED BY OTHERS**

EXAMPLE GATE DETENT AND STOP/KEEPER DETAIL

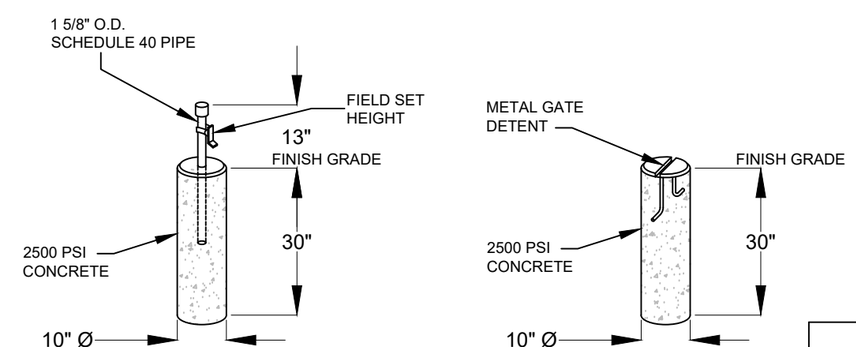

DATE	REVISIONS

DRAFT WITHOUT STAMP

CITY OF BROKEN ARROW
Where opportunity lives

MRL COMMUNICATIONS ENGINEERS
525 CENTRAL PARK DRIVE SUITE 300
OKLAHOMA CITY, OK 73105 | (405)842-2405 | www.mrleng.com

N W E S
0 50 100 150

INDIAN SPRINGS
35.973294°, -95.815489°

H-FRAME & FENCE

PROFILE SCALE:	DESIGN	DATE	DRAFTED	DATE
HORZ. -	JA	03/26	NW	03/26
VERT. -	REVIEWED	DATE	APPROVED	DATE
	LM	03/26	LM	03/26
DRAWING NAME: C2	SHEET 13 OF 16		PROJECT NO. 250527	

M:\Current\BROKEN_ARROW\SITE_DRAWINGS\INDIAN_SPRINGS_BA_TITLEBLOCKS.dwg, 3/12/2026 - 9:31 AM

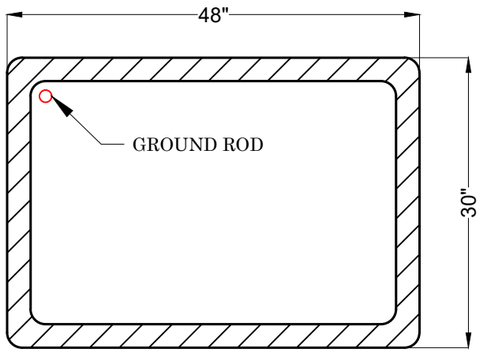

HAND HOLE
TOP VIEW
(NO LID)

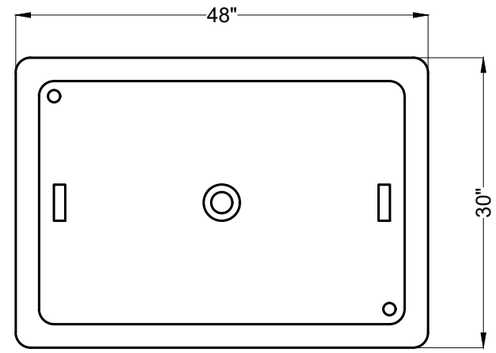

HAND HOLE
TOP VIEW
(WITH LID)

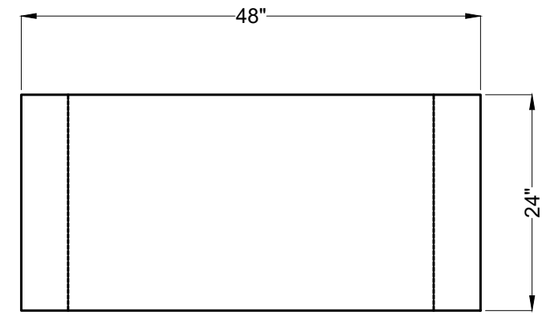

HAND HOLE
SIDE VIEW

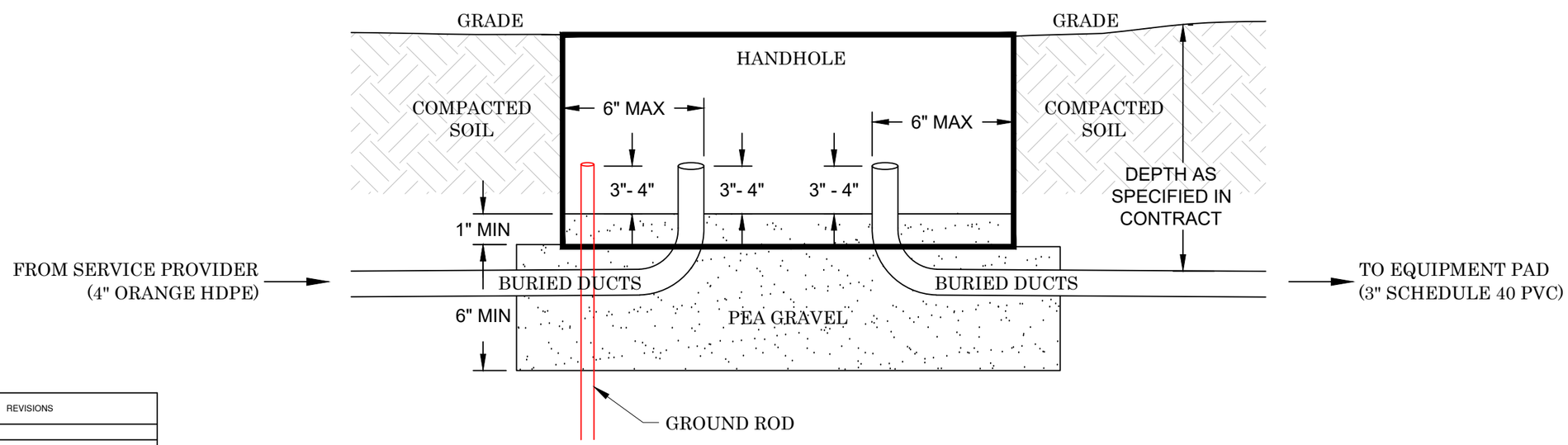

DATE	REVISIONS

DRAFT WITHOUT STAMP

CITY OF BROKEN ARROW
Where opportunity lives

MRL
COMMUNICATIONS ENGINEERS
525 CENTRAL PARK DRIVE SUITE 300
OKLAHOMA CITY, OK 73105 | (405)842-2405 | www.mrleng.com

N W E S
0 50 100 150

INDIAN SPRINGS
35.973294°, -95.815489°

HH INSTALLATION

PROFILE SCALE:	DESIGN	DATE	DRAFTED	DATE
HORZ. -	JA	03/26	NW	03/26
VERT. -	REVIEWED	DATE	APPROVED	DATE
	LM	03/26	LM	03/26
DRAWING NAME: C3	SHEET 14 OF 16		PROJECT NO. 250527	

M:\Current\BROKEN_ARROW\SITE_DRAWINGS\INDIAN_SPRINGS_BA_TITLEBLOCKS.dwg, 3/12/2026 - 9:31 AM

NOTE: ALL EXPANSION JOINTS SHALL BE APPROVED FIBER MATERIAL

RESIDENTIAL CONCRETE DRIVEWAY

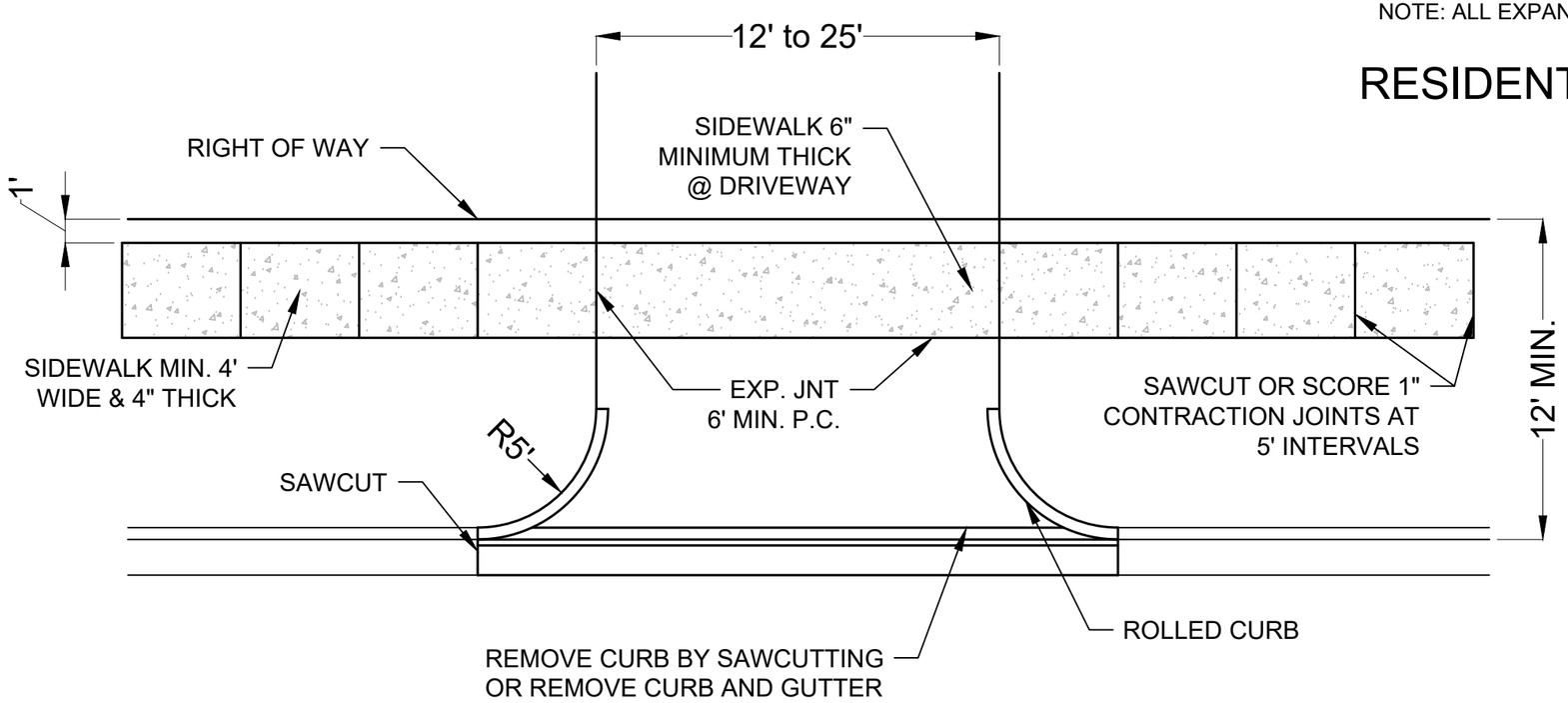

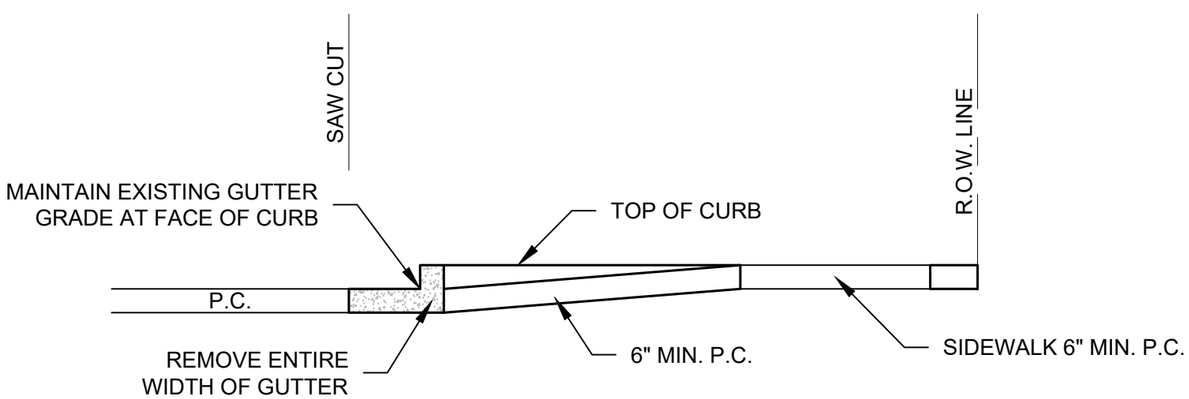

CONCRETE STREET DRIVEWAY SECTION

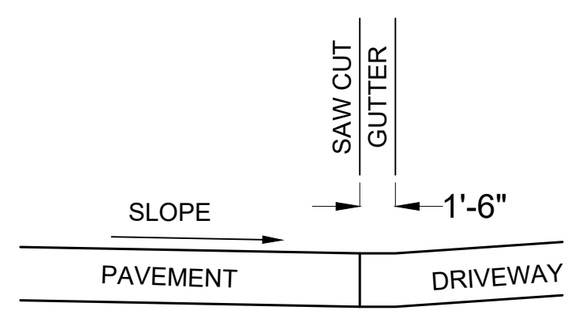

SECTION AT GUTTER

DATE	REVISIONS

DRAFT WITHOUT STAMP

CITY OF BROKEN ARROW
Where opportunity lives

MRL COMMUNICATIONS ENGINEERS
525 CENTRAL PARK DRIVE SUITE 300
OKLAHOMA CITY, OK 73105 | (405)842-2405 | www.mrleng.com

N W E S
0 50 100 150

INDIAN SPRINGS
35.973294°, -95.815489°

ACCESS ROAD DETAILS

PROFILE SCALE:	DESIGN	DATE	DRAFTED	DATE
HORZ. -	JA	03/26	NW	03/26
VERT. -	REVIEWED	DATE	APPROVED	DATE
	LM	03/26	LM	03/26
DRAWING NAME: C4	SHEET 15 OF 16		PROJECT NO. 250527	

M:\Current\BROKEN_ARROW\SITE_DRAWINGS\INDIAN_SPRINGS_BA_TITLEBLOCKS.dwg, 3/12/2026 - 9:31 AM

SELF-SUPPORT TOWER CENTERLINES & AZIMUTHS

APPROXIMATE ANTENNA LOCATION
(AZIMUTH FROM TRUE NORTH)

A. THREE (3) 10' SECTOR MOUNTS
C/L: 100'
AZIMUTHS : 0°, 120°, 240°

RF DESIGNS COMPLETED BY OTHERS.

NOTE: BROKEN ARROW WILL UTILIZE 20,000 SQUARE INCHES AT THE 100' C/L

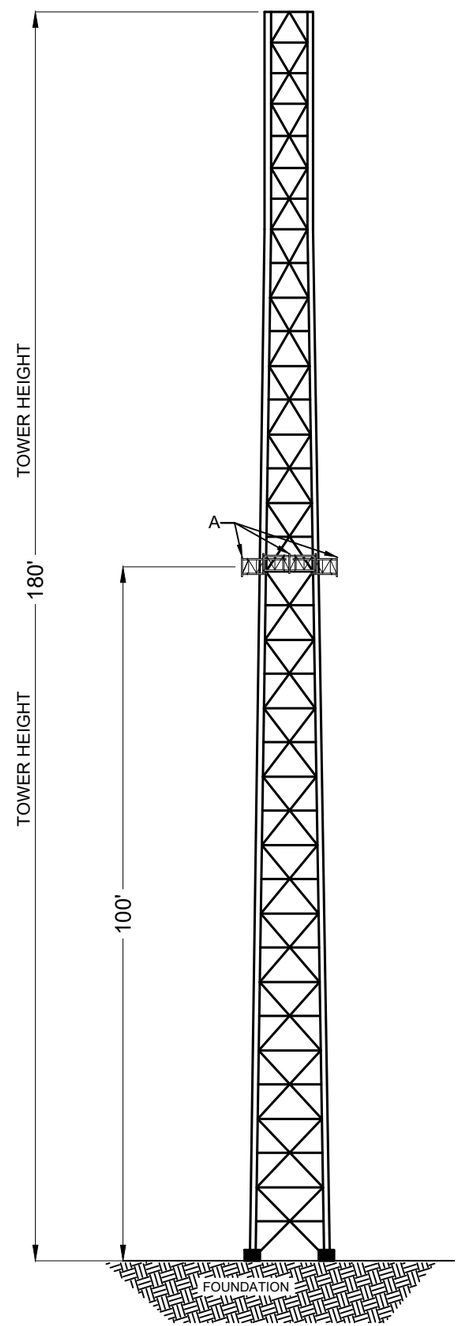

DATE	REVISIONS

RF NOTES

1. Actual cable lengths coax, etc. shall be determined and verified for each per site by the Owner.
2. RF cable and raceway shall comply with the requirements of the National Electrical Code (NEC, NFPA 70), Chapter 8.
3. All specified material for each location (e.g., outdoors, indoors-occupied, indoors-unoccupied, plenums, riser shafts, etc.) shall be approved, listed, or labeled as required by the NEC.
4. RF cable shall be supported at minimum of every three (3) feet except inside monopoles or lattice towers where cable and connector manufacturers support recommendations shall be lowered. Only manufacturer recommended cable support accessories shall be used.
5. The outdoor cable support system shall be provided with a cable tray or T-Brackets as required to support and protect antenna cable runs.
6. Drip loops shall be required on all outside cables. Cables shall be sloped away from the building or outdoor cabinets to prevent water from entering through the coaxial cable port.
7. In outdoor applications, weather proofing shall be required and the following procedure must be used:

   Weatherproof all connections as follows:
   - 1st Layer - Wrap with tape shiny side in, sticky side out
   - 2nd Layer - Wrap with butyl rubber tape
   - 3rd Layer - Wrap with tape shiny side out 3 passes over connector
8. Antennas shall be painted, when required, by the tenant in accordance with antenna manufacturers' surface preparation and painting requirements.
9. Cable shields and tower conduits shall be grounded about one foot before they turn toward the facility.
10. Approved grounding kits, including grounding straps, shall be used to ground the coaxial cable shields. The ground connectors for the kits shall be bonded directly to ground bar using exothermic, double bolted system or approved clamp connections.
11. All radio signal cable shall be labeled or color coded.

ANTENNA DETAIL
(AERIAL VIEW)

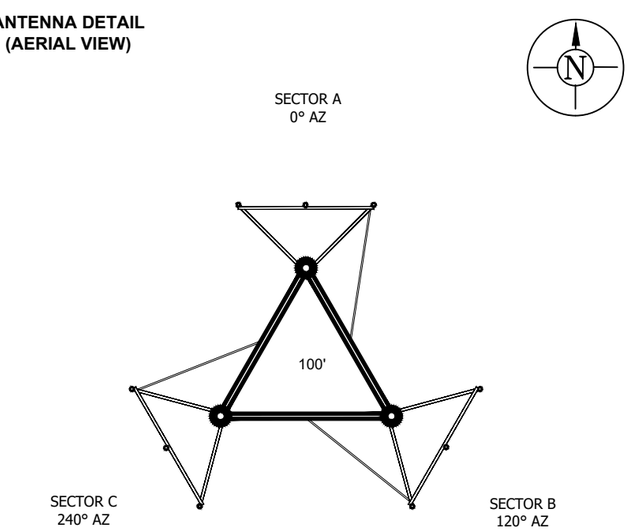

DRAFT WITHOUT STAMP

CITY OF BROKEN ARROW
Where opportunity lives

MRL
COMMUNICATIONS ENGINEERS
525 CENTRAL PARK DRIVE SUITE 300
OKLAHOMA CITY, OK 73105 | (405)842-2405 | www.mrleng.com

N W E S
0 50 100 150

INDIAN SPRINGS
35.973294°, -95.815489°

RF NOTES

PROFILE SCALE:	DESIGN	DATE	DRAFTED	DATE
HORZ. -	JA	03/26	NW	03/26
VERT. -	REVIEWED	DATE	APPROVED	DATE
	LM	03/26	LM	03/26
DRAWING NAME: D1	SHEET 16 OF 16		PROJECT NO. 250527	

M:\Current\BROKEN_ARROW\SITE_DRAWINGS\INDIAN_SPRINGS_BA_TITLEBLOCKS.dwg, 3/12/2026 - 9:31 AM